KÄRCHER

makes a difference

English 3
中文 12

# BD 50/70 R Classic

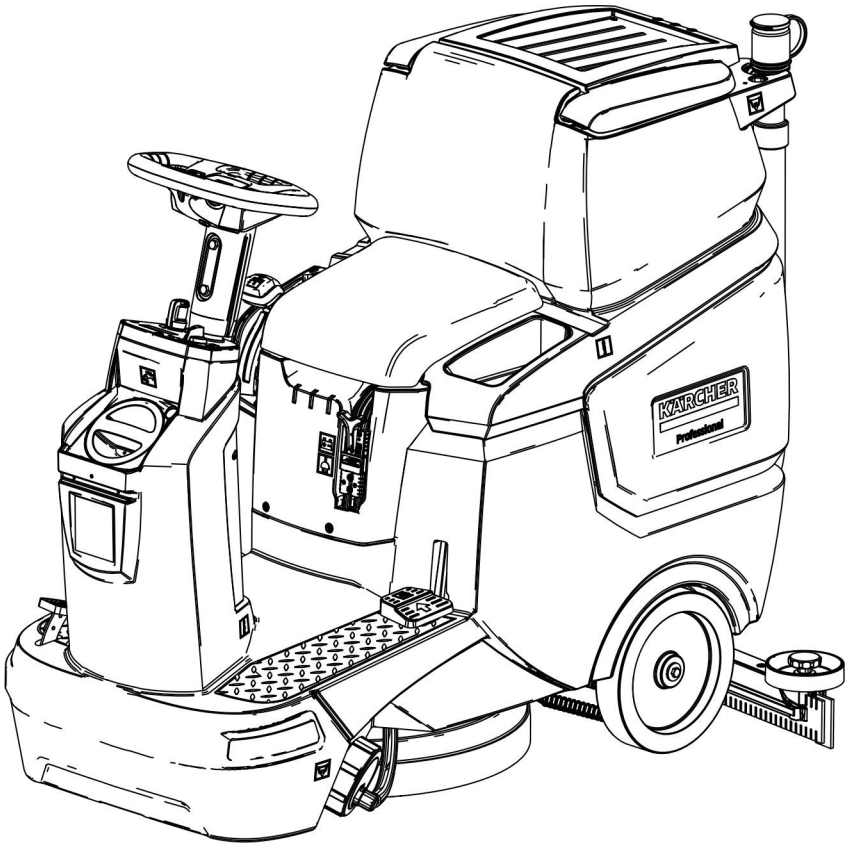


97634940 05/25

Please read and comply with these original instructions prior to the initial operation of your appliance and store them for later use or subsequent owners.

## Contents


| | | |
|---|---|---|
| Safety instructions | EN | 1 |
| Function | EN | 2 |
| Proper use | EN | 2 |
| Environmental protection | EN | 2 |
| Warranty | EN | 3 |
| Control elements | EN | 3 |
| Before Startup | EN | 3 |
| Operation | EN | 5 |
| Transport | EN | 6 |
| Storage | EN | 6 |
| Care and maintenance | EN | 6 |
| Troubleshooting | EN | 8 |
| Accessories | EN | 8 |
| Technical specifications | EN | 9 |
| Accessories and Spare Parts | EN | 9 |


## Safety instructions

The appliance has been approved for use on surfaces with max. gradients as listed under "Technical Specifications".

⚠ ***WARNING***

*Operators must be properly trained on how to use this machine.*

*The machine must be parked safely.*

- Warning and information plates on the machine provide important directions for safe operation.
- Apart from the notes contained herein the general safety provisions and rules for the prevention of accidents of the legislator must be observed.
- Keep packaging films away from children, there is a risk of suffocation!

### Safety Devices

Safety devices serve to protect the user and must not be rendered in operational or their functions bypassed.

#### Seat switch

Switches off the drive motor after a short delay, if the operator leaves the operator seat during operation or while moving.

### Symbols on the machine

| | |
|---|---|
| ⚡ | ⚠ ***DANGER***<br>*Risk of electric shock during the charging process. Do not remove the terminal protective covers from the battery terminals and ensure correct installation.* |

### Danger or hazard levels

⚠ ***DANGER***

*Immediate danger that can cause severe injury or even death.*

⚠ ***WARNING***

*Possible hazardous situation that could lead to severe injury or even death.*

⚠ ***CAUTION***

*Pointer to a possibly dangerous situation, which can lead to minor injuries.*

***ATTENTION***

*Pointer to a possibly dangerous situation, which can lead to property damage.*

### Power connection

⚠ ***DANGER***

- *The voltage indicated on the type plate must correspond to the voltage of the electrical source.*
- *Safety class I - Appliances may only be connected to sockets with proper earthing.*
- *While working with fluids (such as detergents), we recommend the use of a safe socket with overcurrent protection switch (max. 30 mA).*
- *Please use the mains cable prescribed by the manufacturer; the same is also applicable when you replace the cables. See Operating Instructions Manual for Order Number and Type.*
- *Check the power cord with mains plug for damage before every use. If the power cord is damaged, please arrange immediately for the exchange by an authorized customer service or a skilled electrician.*
- *The appliance may only be connected to an electrical supply which has been installed by an electrician in accordance with IEC 60364.*
- *Never touch the mains plug with wet hands.*
- *Make sure that the power cord or extension cables are not damaged by running over, pinching, dragging or similar. Protect the cable from heat, oil, and sharp edges.*
- *The power cord must be checked regularly for damages, such as cracks or aging. If damage is found, the cable must be replaced before further use.*
- *If couplings of the power cord or extension cable are replace the splash protection and the mechanical tightness must be ensured.*
- *Do not clean the appliance with a water hose or high-pressure water jet (danger of short circuits or other damage).*

***ATTENTION***

- *Operating procedures create short term power sinkings.*
- *During unfavorable net conditions other devices might be disturbed.*
- *With a net impedance lower then 0,15 Ohm no disturbances are to be expected.*

### Application

⚠ ***DANGER***

- *Appliances with working equipment, specifically the power cord and the extension cable, must be checked to ensure that it is in proper working order and is operating safely prior to use. Otherwise, immediately pull out the power plug. The appliance must not be used.*
- *The water level limiter must be cleaned regularly and checked for signs of damage.*
- *Never spray and vacuum up explosive liquids, combustible gases, explosive dusts as well as undiluted acids and solvents! This includes petrol, paint thinner or heating oil which can generate explosive fumes or mixtures upon contact with the suction air. Acetone, undiluted acids and solvents must also be avoided as they can harm the materials on the machine.*
- *Do not vacuum up any burning or glowing objects.*
- *Humans and animals must not be vacuumed with this appliance.*
- *Appliances may not be used in outside areas in low temperatures.*
- *If the appliance is used in hazardous areas (e.g. filling stations) the corresponding safety provisions must be observed. It is not allowed to use the appliance in hazardous locations.*
- *Only use cleaners recommended by the manufacturer and comply with their application, disposal and warning guidelines.*
- *Do not use the recommended detergents in an undiluted state. The products are safe for operations as they do not contain any acids, alkalis or environment hazardous substances. We recommend to keep the detergents out of reach of children. If the detergent comes in contact with the eyes, please rinse the eyes thoroughly with water and consult a doctor immediately if the detergent has been swallowed.*

⚠ ***CAUTION***

- *The appliance is not suitable for vacuuming dust which endangers health.*
- *Please follow the statutory regulations for disposing off dirt water and alkalis.*

***ATTENTION***

- *The socket on the device may only be used to connect the attachments and accessories mentioned in the operating instructions.*
- *The appliance is not a vacuum cleaner! Never suck in more fluid than what has been sprayed. Do not use to suck in dry dust!*
- *Appliance suited for moist to wet floors with a max. water level of approx. 1 cm. Do not drive into an area where there is a risk of this max. water level being exceeded.*
- *The machine is only suitable for use on the types of surfaces specified in the operating instructions.*
- *Protect the appliance against frost.*

### Operation

⚠ ***DANGER***

- *The operator must use the appliance properly. The person must consider the local conditions and must pay attention to third parties, in particular children, when working with the appliance.*
- *Never leave the machine unattended so long as the engine is running. The operator must not leave the device before the engine has been shut down, the device has been protected against accidental movement, the parking brake has been applied and the ignition key/intelligent key has been removed.*
- *Always use appropriate gloves while working on the device.*

– *In order to prevent unauthorised use of devices that are provided with an ignition key/intelligent key, the ignition key/ intelligent key must be removed.*
– *This machine is not intended for use by persons (including children) with reduced physical, sensory or mental capabilities, or lack of experience and knowledge.*
– *Children should be supervised to prevent them from playing with the appliance.*
– *Turn off the appliance immediately in case of leaks.*
– *Caution! Switch the appliance off immediately in case foam or liquid escape!*
– *Do not open the hood when the motor is running.*
– *On tilted surfaces, the tilt angle and the driving direction should not exceed the values given in the Operating Instructions.*

### Transport

⚠ ***WARNING***

*The engine is to be brought to a standstill and the appliance is to be fastened properly during transportation.*

### Maintenance

⚠ ***DANGER***

– *Switch off the appliance prior to performing any cleaning or maintenance tasks on the appliance, replacing parts or switching over to another function. In the case of mains operated appliances, remove the mains plug; in the case of battery-operated appliances, pull out the battery plug or clamp off the battery.*
– *Maintenance work may only be carried out by approved customer service outlets or experts in this field who are familiar with the respective safety regulations.*
– *Please observe the local safety regulations regarding portable commercially used appliances.*

### Accessories and Spare Parts

⚠ ***DANGER***

*Only use accessories and spare parts which have been approved by the manufacturer. The exclusive use of original accessories and original spare parts ensures that the appliance can be operated safely and trouble free.*

### Appliances with rotating brushes/ disks

⚠ ***DANGER***

– *Use only brushes/ disks that are provided with the appliance or specified in the Operations Manual. The use of other brushes/ disks can affect the safety of the appliance.*
– *Please keep in mind that the power cord or extension cable can be damaged when run over while operating the cleaning head with rotating brushes/ disks.*

### Attachments

⚠ ***DANGER***

– *The attachments are not approved for public transport. Please ask your dealer for the equipment set for approval for road traffic.*
– *It is strictly prohibited to take co-passengers.*
– *Ride-on appliances may only be started after the operator has occupied the driver's seat.*
– *Please follow the special safety instructions in the Operating Instructions Manual for petrol engine devices.*
– *Do not use the appliance without a falling objects protective structure (FOPS) in areas, where there is a chance that the operator may be struck by falling objects.*

### Battery-operated machines

⚠ ***DANGER***

– *Always follow the instructions of the battery manufacturer and the charger manufacturer. Please follow the statutory requirements for handling and disposing batteries.*
– *Do not place tools or similar items on the battery. Risk of short-circuit and explosion.*
– *Do not work with open flames, generate sparks or smoke in the vicinity of a battery or a battery charging room. Danger of explosion.*
– *Be careful while handling battery acid. Follow the respective safety instructions!*
– *Used batteries are to be disposed according to the EC guideline 91/ 157 EWG or the corresponding national regulations in an environment-friendly manner.*

***ATTENTION***

– *Never leave the batteries in a discharged state; recharge them as soon as possible.*
– *Always keep the batteries clean and dry to avoid creep currents. Protect the batteries and avoid contact with impurities such as metal dust.*

## Function

The scrubbing vacuum cleaner is used for the wet cleaning of level floors.

– The device can be easily adjusted to the respective cleaning task by adjusting the water volume and the detergent volume.
  The detergent dosing unit can be adjusted via the addition in the tank.
– The appliance is equipped with a fresh water and a waste water tank (70 litres each). These allow an effective cleaning with a long usage life.
– A working distance of 510 mm will improve the efficiency when you are using the appliance for a long period.
– Batteries can be selected depending on the configuration (refer to Chapter "recommended batteries")

**Note:**

The appliance can be equipped with various accessories depending on the cleaning task.

Please request our catalogue or visit us on the Internet at www.kaercher.com.

## Proper use

This appliance is suited for the commercial use, e.g. in hotels, schools, hospitals, factories, shops, offices, and rental companies.

Use this appliance only as directed in these operating instructions.

– The appliance may only be used for the cleaning of hard surfaces that are not sensitive to moisture and polishing operations.
– This appliance is intended for inside use.
– The application temperature ranges from +5°C to +40°C.
– The appliance is not suited for the cleaning of frozen grounds (e.g. in cold stores).
– The appliance may only be equipped with original accessories and spare parts.
– The appliance is not intended for the cleaning of public traffic routes.
– The machine should not be used on surfaces that are sensitive to pressure. Please consider the allowed load per surface unit of the floor. Details of load per surface unit can be found in the technical data.
– The appliance is not suited for the use in potentially explosive environments.
– The machine should not be used to suck in inflammable gases, undiluted acids or solvents.
  This includes petrol, thinning agents or hot oil that can form an explosive mixture when it comes in contact with sucked air. Do not use acetone, undiluted acids and solvents as they are aggressive towards the materials from which the appliance is made.

## Environmental protection

| | |
|---|---|
| | The packaging materials are recyclable. Please do not throw packaging in the domestic waste but pass it on for recycling. |
| | Old units contain valuable recyclable materials. Batteries, oil and similar substances may not be released into the environment. Therefore please dispose of old units through suitable collection systems. |

**Notes about the ingredients (REACH)**

You will find current information about the ingredients at:

***www.kaercher.com/REACH***

## Warranty

The warranty terms published by the relevant sales company are applicable in each country. We will repair potential failures of your appliance within the warranty period free of charge, provided that such failure is caused by faulty material or defects in manufacturing. In the event of a warranty claim please contact your dealer or the nearest authorized Customer Service centre. Please submit the proof of purchase.

## Control elements

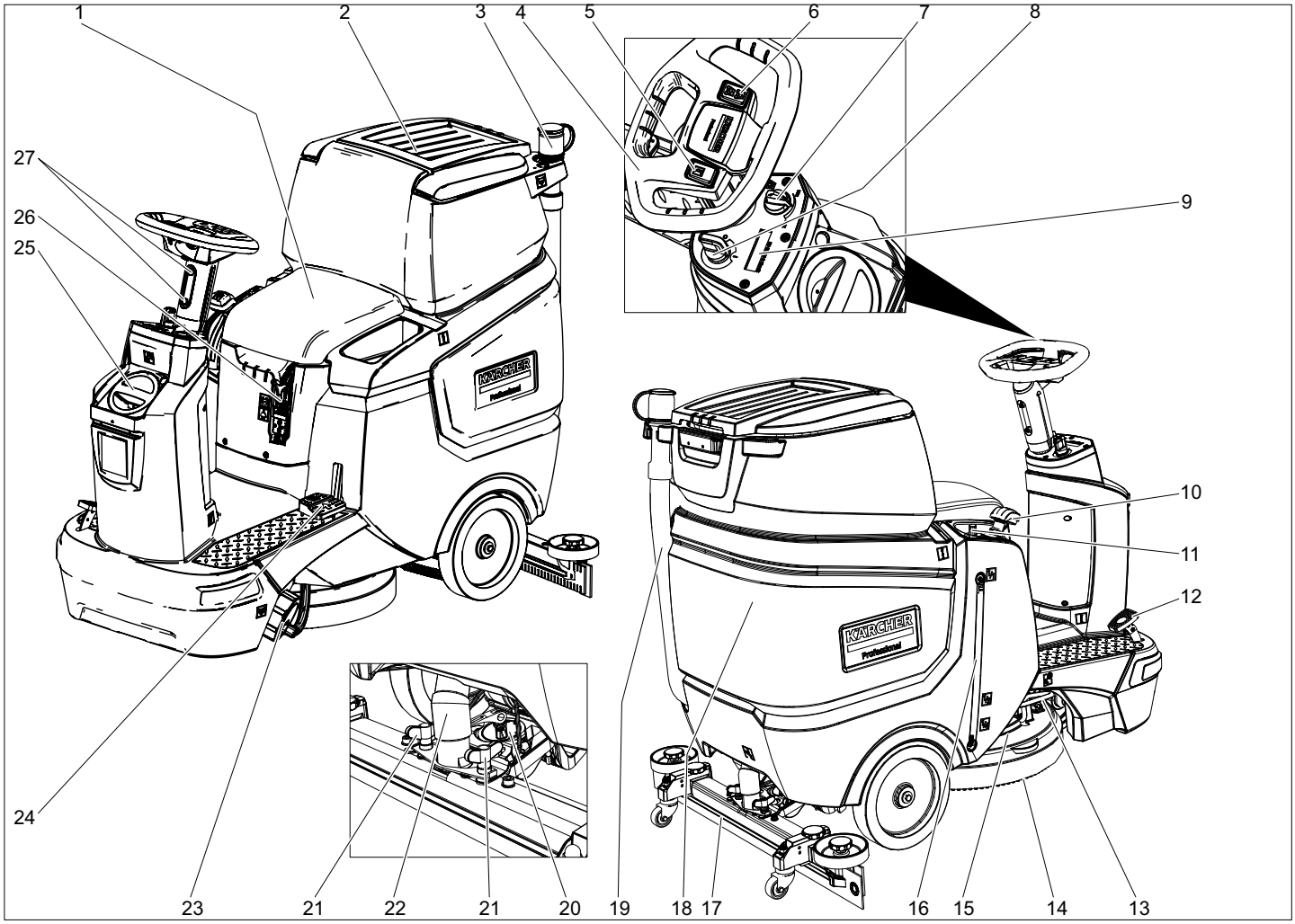


1 Seat
2 Cover waste water tank
3 Dosing equipment for dirt water
4 Steering wheel
5 Horn switch
6 Driving direction switch
7 Working speed rotary knob
8 Key switch
9 Display
10 Vacuum bar lever
11 Water quantity regulator
12 Drive pedal
13 Pedal for changing brushes
14 Disc brush
15 Cleaning head
16 Fresh water level display
17 Vacuum bar
18 waste water tank
19 Dirt water discharge hose
20 Rotary handle to incline the vacuum bar
21 Wing nuts for fastening the vacuum bar
22 Suction hose
23 Closure fresh water tank with fresh water filter
24 Raising/lowering the pedal for the cleaning head
25 Fresh water tank cover
Fresh water filler neck
26 Battery socket
27 Steering wheel alignment

### Colour coding

– The operating elements for the cleaning process are yellow.
– The controls for the maintenance and service are light gray.

### Symbols on the machine

| | |
|---|---|
| | Battery socket |
| 1/4 | Filling level fresh water tank 25% |
| | Dosage cleaning solution |
| | Raising/lowering the cleaning head |
| | Pedal for changing brushes |
| | Raising/lowering the vacuum bar |
| | Mop holder ** |
| | Drain outlet fresh water tank |
| | Drain outlet waste water tank |
| | Lashing point |

** option

## Before Startup

### Batteries

| | |
|---|---|
| | *Observe the directions on the battery, in the instructions for use and in the vehicle operating instructions* |

| | |
|---|---|
| | *Wear eye protection* |
| | *Keep children away from acid and batteries* |
| | *Danger of explosion* |
| | *Fire, sparks, naked flames and smoking must be strictly avoided* |
| | *Danger of chemical burns* |
| | *First aid* |
| | *Warning note* |
| | *Disposal* |
| Pb | *Do not throw the battery into the regular waste* |

⚠ ***DANGER***
*Risk of explosion!*
*Do not place tools or similar items on the battery. Risk of short-circuit and explosion. Risk of injury. Ensure that wounds never come into contact with lead. Always clean your hands after having worked with batteries.*

### Insert batteries and connect

The "Pack" model contains built-in batteries.
➔ Pull out the battery plug.
➔ Tilt the waste water tank backwards.

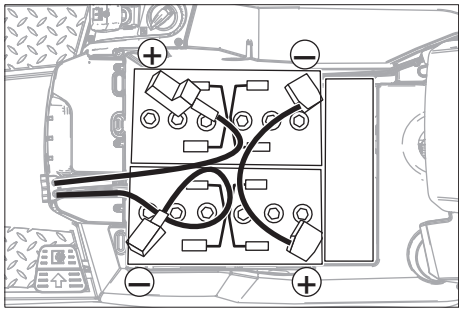

***ATTENTION***
*Risk of damage. Mind correct polarity.*
➔ Connect pole using the enclosed connecting cable.
➔ Connect the connection cable to the free battery poles (+) and (-).
➔ Check for correct installation of the terminal protective covers.
➔ Insert battery plug.
***ATTENTION***
*Risk of damage due to total discharge. Charge the batteries before commissioning the appliance.*

### Charge the batteries

**Note:**
The appliance is equipped with a total discharge protection, i.e. if the still admissible minimum of the capacity is reached, the appliance can only be driven.
Brush drive and suction are disabled.
➔ Drive the appliance directly to the charging station; avoid any steep gradients in the process.
**Note:**
When using other batteries (e.g. batteries from other manufacturers), the total discharge protection level for the respective battery must be reset by the Kärcher aftersales service.
⚠ ***DANGER***
*Risk of electric shock. Observe power supply net and fuse protection – see "Charger". Use the charger in dry rooms with sufficient ventilation only!*
**Note:**
Average charging time is approx. 10 -12 hours.
The recommended chargers (suitable for the batteries used) are regulated electronically and will automatically terminate the charging process.
⚠ ***DANGER***
*Danger of explosion. The room, where the machine is kept to charge the battery, must feature a minimum volume and an air exchange with a minimum flow rate, depending on the type of battery (see "Recommended Batteries").*
*Risk of explosion. The charging of wet batteries is only permitted if the waste water tank is tilted up.*
➔ Empty the waste water tank.
➔ Set the key switch to position "0" and pull out the key.
➔ Tilt the waste water tank backwards.

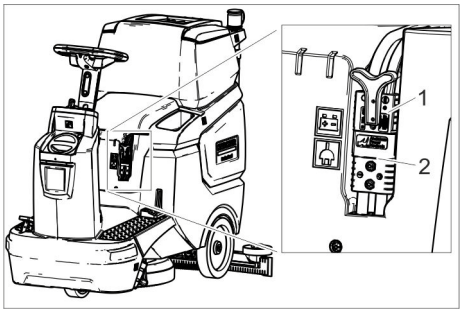


1 Battery plug, battery side
2 Battery plug, appliance side

➔ Detach the battery plug on the battery side.
***ATTENTION***
*Risk of damage!*
– *Do **not** connect the charger with the battery plug on the unit side.*
– *Only use a charger that is suitable for the installed battery type:*
**Note:** Please read the operating instructions of the charger manufacturer, especially the chapters on safety instructions!
➔ Connect the battery plug on the battery side with the charger.
➔ Plug the mains plug of the charger into a power outlet.
➔ Execute the charging process according to the information in the operating instructions of the charger.

### Low maintenance batteries (wet batteries)

➔ Add distilled water one hour before the charging process comes to an end; follow the correct acid level. There are corresponding indicators on the battery. At the end of the charging process, all cells must gas.
⚠ ***DANGER***
*Risk of chemical burns. Adding water to the battery in its discharged state can cause the acid to leak!*
*Use safety glasses while handling battery acid and follow the safety instructions to avoid personal injury or damage to clothes. Should the acid spray on to the skin or clothes, rinse immediately with lots of water.*
***ATTENTION***
*Use only distilled or desalinated water (EN 50272-T3) for filling the battery.*
*Do not add any substances (so-called performance improving agents), else warranty claims will not be entertained.*

### Maximum battery dimensions

| | |
|---|---|
| Length | 408 |
| Width | 348 |
| Height | 284 |

## Removing the batteries

➔ Turn key switch to “0”.
➔ Pull out the battery plug.
➔ Tilt the waste water tank backwards.
➔ Clamp off the minus pole of the battery.
➔ Clamp off the remaining cables from the battery.
➔ Remove the batteries.
➔ Dispose of the used batteries according to the local provisions.

## Installing the Brushes

The installation of the brushes is described in the chapter "Maintenance tasks".

## Installing the Vacuum Bar

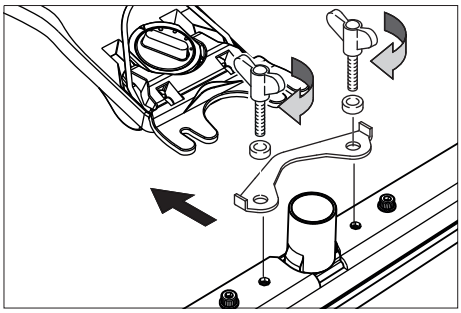

➔ Insert the vacuum bar into the vacuum bar suspension in such a manner that the profiled sheet is positioned above the suspension.
➔ Tighten the wing nuts.
➔ Insert the suction hose.

## Adjusting the steering wheel

➔ Unscrew both bolts of the steering wheel alignment.
➔ Adjust the steering wheel to the desired height.
➔ Tighten both the screws.

# Operation

***ATTENTION***
*Risk of damage!*
*Do not disconnect the battery plugs during operation.*
**Note:**
To take all functions out of operation immediately, bring the key switch into the "0" position.

## Turning on the Appliance

➔ Take the seating position.
➔ Set the key switch to "1".
The display shows the following one after the other:
– Period of time until the next aftersales service
– Software version, control panel
– Charging state of the battery and number of operating hours

## Check parking brake

⚠ ***DANGER***
*Risk of accident. Prior to every operation, the parking brake must be checked for proper function on a level ground.*
➔ Turn on the appliance.
➔ Set the travel direction switch to "forward".
➔ Gently depress drive pedal.
➔ The brake must unlock audibly. The appliance must roll easily on a plane surface. When the pedal is released, the brake locks audibly. If this is not the case, the appliance needs to be put out of operation and aftersales service needs to be called.

## Driving

⚠ ***DANGER***
*Risk of accident. If the device does no longer show any braking effect, proceed as follows:*
➔ If the appliance does not come to a halt on an ascent of above 2%, then the key switch must not be set to 0. The appliance must continue to be operated until a horizontal plane is achieved with it.
➔ When a horizontal plane has been achieved, the appliance must be shut down and aftersales service needs to be called.
➔ Further, follow all warning instructions for braking.
⚠ ***DANGER***
*Danger of tipping if gradient is too high.*
➔ *The gradient in the direction of travel should not exceed 8%.*
*Drive only lengthwise on uphill and downhill gradients, do not turn.*
*Danger of tipping when driving round bends at high speed.*
*Danger of slipping on wet floors.*
➔ *Drive slowly when cornering.*
*Danger of tipping on unstable ground.*
➔ *Only use the machine on sound surfaces.*
*Danger of tipping with excessive sideways tilt.*
➔ *The gradient perpendicular to the direction of travel should not exceed 8%.*

### Driving

➔ Take the seating position.
➔ Pull the vacuum bar lever upwards and lock it in place.
➔ Push the pedal for the cleaning head down and lock it in place.
➔ Set the key switch to "1".
➔ Set the direction of travel using the drive direction button on the steering wheel.
➔ Determine the driving speed by pressing the drive pedal.
➔ Stop the machine: Release the drive pedal.
**Note:**
If the cleaning head is raised, the maximum speed is not affected by the working speed rotary knob.
The direction of travel can also be changed during the cleaning operation. This way, a certain position can be intensively cleaned by driving back and forth several times.

## Filling in detergents

### Detergent

⚠ ***WARNING***
*Risk of damage. Only use the recommended detergents. With other detergents, the operator bears the increased risk regarding the operational safety and danger of accident.*
*Only use detergents that are free from solvents, hydrochloric acid and hydrofluoric acid.*
*Follow the safety instructions for using detergents.*
**Note:**
Do not use highly foaming detergents.

| Application | Detergent |
|---|---|
| Routine cleaning of all water resistant floors | RM 746<br>RM 780 |
| Routine cleaning of glossy surfaces (e.g. granite) | RM 755 es |
| Routine cleaning and basic cleaning of industrial floors | RM 69 ASF |
| Routine cleaning and basic cleaning of fine stoneware tiles | RM 753 |
| Routine cleaning of tiles in sanitary areas | RM 751 |
| Cleaning and disinfection in sanitary areas | RM 732 |
| Removal of coating from all alkali-resistant floors (e.g. PVC) | RM 752 |
| Removal of coating from linoleum floors | RM 754 |

### Fresh water

➔ Open the cover of the fresh water reservoir.
➔ Fill the tank half full using fresh water (maximum 50 °C).
➔ Pour in detergent.
➔ Top up the tank with water.
➔ Close the cover of the fresh water reservoir.

## Setting the Vacuum Bar

### Oblique position

To improve the vacuuming result on tiled floors the vacuum bar can be turned to an oblique position of up to 5°.

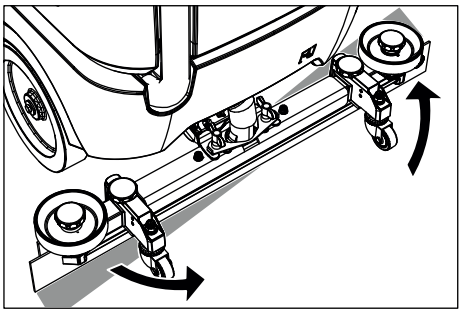

➔ Release the wing nuts.
➔ Turn the vacuum bar.
➔ Tighten the wing nuts.

### Inclination

If the vacuum result is unsatisfactory the inclination of the straight vacuum bar can be modified.

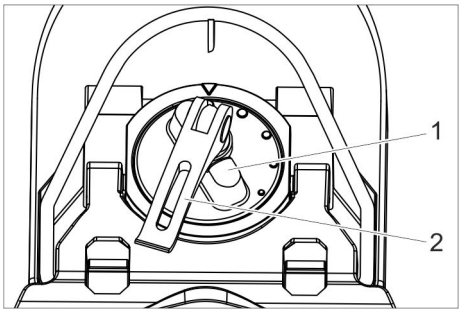


1 Turning handle
2 Tension lever

➔ Lift the tension lever.
➔ Adjust the rotary handle to incline the suction bar.
➔ Press the tension lever downwards.

### Height

The bend of the suction lips upon contact with the floor is influenced with the height adjustment.

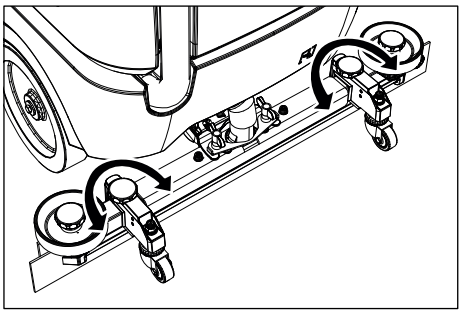

➔ Try adjusting the twist handles of the height adjustment until the best vacuuming result is achieved.

### Setting the water quantity

➔ Adjust the water quantity using the regulating button according to the dirt on the floor covering.

**Note:**
Carry out initial cleaning attempts with low water volume. Increase water volume step-by-step until the desired cleaning result is achieved.

### Cleaning operations

➔ Take the seating position.
➔ Set the key switch to "1".
➔ Set the direction of travel using the drive direction button on the steering wheel.
➔ Turn the working speed rotary knob to the desired value.
The speed is shown on the display during the adjustment.
The display is shown in percentage of the maximum speed.
➔ Adjust the water volume using the regulation valve.
➔ Pull the lower half of the handle section on the vacuum bar lever upwards and hold it.
➔ Press the vacuum bar lever downwards.
The vacuum bar is lowered and the suction starts.
➔ Press the pedal for the cleaning head downwards/to the right, release it and allow it to move upwards.
➔ Determine the driving speed by pressing the drive pedal.
The cleaning head is lowered, the brush drive starts and the cleaning solution will be applied.
➔ Run over the surface to be cleaned.
➔ Stop the machine: Release the drive pedal.

#### Complete cleaning

➔ Push the pedal for the cleaning head down until it locks into place.
➔ Push the appliance a little further to vacuum up the remaining water.
➔ Pull the vacuum bar lever upwards until it locks into place.
The suction turbine is switched off after a after-running time of 10 seconds.
➔ Turn key switch to “0”.

### Emptying the waste Water tank

**Note:**
If the waste water tank is full, the float closes the suction opening and the suction turbine runs at an increased speed.

⚠ ***WARNING***
*Please observe the local provisions regarding the wastewater treatment.*

➔ Take the dirt water discharge hose from the support and lower above a suited collection device.

**Note:**
The wastewater flow can be controlled by squeezing the dosing unit.

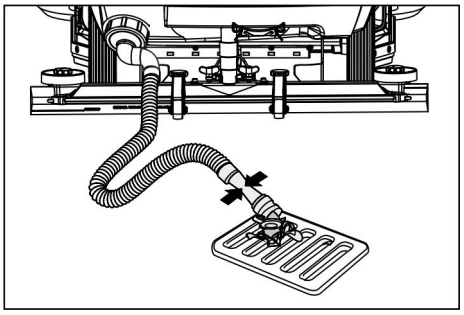

➔ Let off water by opening the dosage device at the discharge hose.
➔ The rinse the dirt water reservoir with clear water.

### Emptying the Fresh Water Tank

➔ Unscrew the cover on the fresh water tank.
➔ Drain the fresh water.
➔ Screw the cover onto the fresh water tank.

### Shutting down

➔ Charge battery, if required.

## Transport

⚠ ***DANGER***
*Risk of injury! When loading or unloading the machine, it may only be operated on gradients up to the maximum value (see "Technical Specifications"). Drive slowly.*

⚠ ***CAUTION***
*Risk of personal injury or damage! Mind the weight of the appliance during transport.*

➔ Drain the fresh water tank and waste water tank prior to loading.
➔ Remove the disc brush from the brush head.

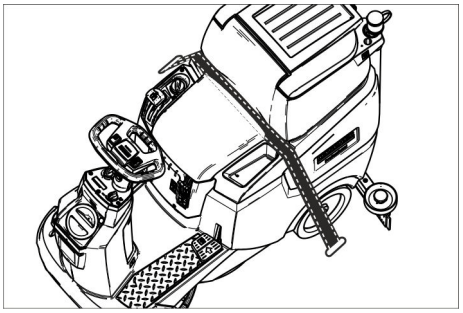

➔ When transporting in vehicles, secure the appliance according to the guidelines from slipping and tipping over.

### Pushing the device

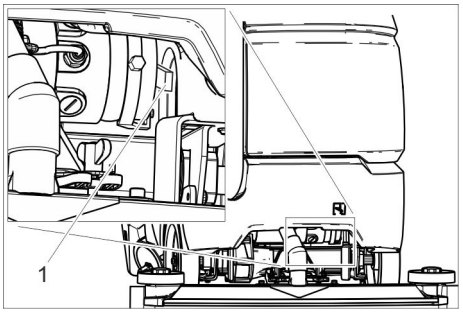


1 Unlocking lever

➔ Press the unlocking lever upwards and push the appliance .

⚠ ***DANGER***
*Danger of accident due to lacking brake function.*
*You must press the unlocking lever down again after pushing the appliance.*

## Storage

⚠ ***CAUTION***
*Risk of personal injury or damage! Consider the weight of the appliance when storing it.*

➔ This appliance must only be stored in interior rooms.
➔ Select the storage site for the appliance taking into consideration the permissible total weight of the appliance in order not to impact its stability.

## Care and maintenance

⚠ ***DANGER***
*Risk of injury! Before carrying out any tasks on the machine, set the main key to "0" and remove it. Pull the battery plug.*

➔ Drain and dispose of the dirt water and the residual fresh water.

⚠ ***CAUTION***
*Risk of injury due to overrun of the suction turbine.*
*Suction turbine will continue to run for a while after switch-off. Carry out maintenance tasks only after the suction turbine has come to a halt.*

### Maintenance schedule

#### After the work

***ATTENTION***
*Risk of damage. Do not sluice the appliance with water and do not use aggressive detergents.*

➔ Drain off dirt water.
➔ Rinse the waste water tank with clear water.
➔ Clean the coarse dirt filter.
➔ Clean the outside of the appliance with a damp cloth which has been soaked in mild detergent.
➔ Clean the vacuum lips, check for wear and replace them if required.
➔ Check the brushes for wear, replace if required.
➔ Charge the battery:
If the charging state of the battery is under 50%, charge the battery fully and without interruption.
If the charging state of the battery is over 50%, only recharge the battery if the entire operation duration will be required when next used.

#### Weekly

➔ When used regularly, charge the battery fully and without interruption at least once a week.

#### Monthly

➔ Drain the fresh water tank and flush out deposits.
➔ Clean the fresh water filter.
➔ Clean the swimmer.
➔ Clean the fluff filter.
➔ During long operating pauses: Carry out refill charging for the battery.

- ➔ Check battery poles for oxidation, brush off if necessary. Ensure firm seating of the connection cable.
- ➔ Clean the seals between waste water tank and cover and check for tightness, replace if required.
- ➔ Check the acid density of the cells if the batteries are not maintenance-free batteries.
- ➔ For long periods of disuse, only turn the device off when the battery is fully charged. Fully recharge the battery at least every month.

### Yearly

- ➔ Have the prescribed inspection carried out by the customer service.

## Maintenance Works

### Maintenance contract

To ensure a reliable operation of the appliance maintenance contracts can be concluded with the competent Kärcher sales office.

### Clean the float and fluff filter.

- ➔ Open the cover of the waste water tank.

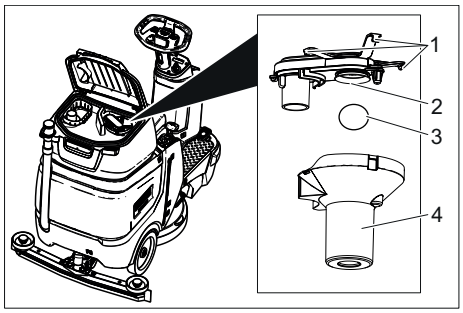


1 Lock hook
2 Fluff filter
3 Float
4 Swimmer casing

- ➔ Detach locking hooks.
- ➔ Pull off the float housing in a downward direction.
- ➔ Remove the float from the float housing and clean it.
- ➔ Clean the fluff filter.
- ➔ Reassemble the parts in the reverse sequence.

### Cleaning the coarse dirt filter

- ➔ Open the cover of the waste water tank.

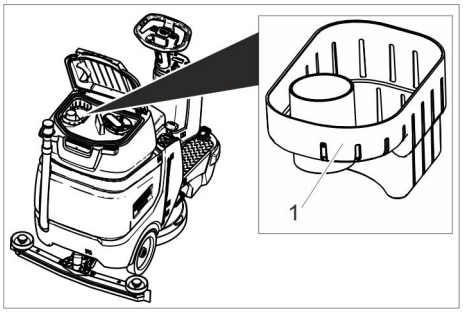


1 Coarse dirt sieve

- ➔ Pull the coarse dirt filter off in an upward direction.
- ➔ Rinse off the coarse dirt filter under running water.
- ➔ Reinsert the coarse dirt filter into the waste water tank.

### Replacing the vacuum lips

- ➔ Remove the vacuum bar.
- ➔ Unscrew the star grips.

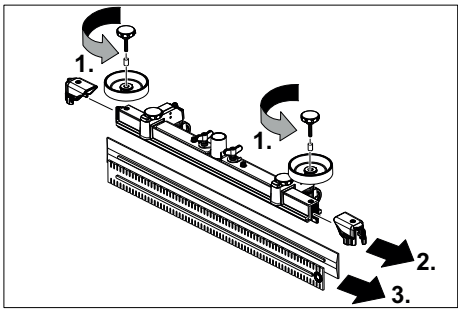


- ➔ Remove the plastic parts.
- ➔ Remove the vacuum lips.
- ➔ Insert new vacuum lips.
- ➔ Insert the plastic parts.
- ➔ Screw in and tighten the star grips.

### Replacing the disk brushes

- ➔ Lift the cleaning head.
- ➔ Press the pedal for changing the brushes downward beyond its resistance.
- ➔ Pull the disc brush out of the side below the cleaning head.
- ➔ Hold the new disc brush under the cleaning head, push upward and lock.

## Frost protection

In case of danger of frost:

- ➔ Empty the fresh and dirt water reservoirs.
- ➔ Store the appliance in a frost-protected room.

# Troubleshooting

⚠ ***DANGER***
*Risk of injury! Before carrying out any tasks on the machine, set the main key to "0" and remove it. Pull the battery plug.*

➔ Drain and dispose of the dirt water and the residual fresh water.

⚠ ***CAUTION***
*Risk of injury due to overrun of the suction turbine.*

*Suction turbine will continue to run for a while after switch-off. Carry out maintenance tasks only after the suction turbine has come to a halt.*

| Fault | Remedy |
|---|---|
| Appliance cannot be started | Seat switch not operated, sit down on the seat.<br>The machine operates only if the operator is seated on the seat. |
| | Insert battery plug. |
| | Set the key switch to "1". |
| | Take your foot off the accelerator before switching on the key switch. If the fault recurs, call aftersales service. |
| | Check battery; charge it, if needed |
| Machine does not move | Press the unlocking lever downwards (see "Transport/Pushing the appliance"). |
| Insufficient water quantity | Increase the water volume on the regulating knob for water volume. |
| | Check fresh water level, refill tank if necessary. |
| | Clean the fresh water filter. |
| | Check hoses for blockages; clean if required. |
| Insufficient vacuum performance | Wastewater reservoir is full; shut off the appliance and empty the wastewater reservoir |
| | Clean the seals between waste water tank and cover and check for tightness, replace if required. |
| | Check the fluff filter for soiling, clean if necessary. |
| | Clean the vacuum lips on the vacuum bar, turn or replace if required |
| | Check if the vacuum bar is plugged, remove plug if required |
| | Check if the cover on the dirt water discharge hose is closed |
| | Check suction hose for blockages; clean if required. |
| | Check the suction hose for tightness; replace if required. |
| | Check dirt water drain hose to see it is leak-proof. |
| | Check the setting of the vacuum bar. |
| | Attach additional weight (accessory) to the vacuum bar. |
| Insufficient cleaning result | Check the brushes for wear, replace if required. |
| | Check the brush type and the detergent for their suitability. |
| Speed of suction turbine has increased | Empty the waste water tank. |
| | Clean the swimmer. |
| | Check / clean the lint trap. |
| | Check suction hose for blockages; clean if required. |
| | Check if the vacuum bar is plugged, remove plug if required |
| Brush does not turn | Check if foreign matters block the brushes; remove foreign matter if required. |
| **In case of faults that cannot be remedied using the table below please contact the customer service.** | |

# Accessories

| Description | Part no.: | Description |
|---|---|---|
| Disk brush, red (medium, standard) | 4.905-026.0 | For the use with all common cleaning tasks. |
| Disk brush, red (medium, standard) | 9.753-021.0 | |
| Disk brush, natural (white) | 4.905-027.0 | Made of natural fibres for spot cleaning and polishing. |
| Disk brush, black (hard) | 4.905-029.0 | For heavy soiling and for deep cleaning. For robust floorings only. |
| Driver plate pad | 4.762-534.0 | For cleaning with pads. With quick change coupling and center lock. |
| Pad, red (medium soft) | 6.369-079.0 | For cleaning and cleanering of all floors. |
| Pad, green (medium hard) | 6.369-078.0 | For cleaning heavily soiled floors and for deep cleaning. |
| Pad, black (hard) | 6.369-077.0 | With stubborn soiling and for deep cleaning. |
| Pad, beige (light grain) | 6.369-468.0 | For polishing and refreshing of hard and flexible floorings. |
| Pad, beige (natural hair proportion) | 6.371-146.0 | |
| Suction bar, 850 mm, straight | 4.777-401.0 | |
| Suction bar, 850 mm, bent | 4.777-411.0 | |
| Set homebase box | 4.035-406.0 | |
| Beacon lamp | 4.039-267.0 | |
| Fleet Management module | 4.039-268.0 | |
| Bag holder | 4.039-269.0 | |
| Presweep unit | 4.039-270.0 | |
| Mop holder | 4.039-271.0 | |
| Spray mop | 5.999-045.0 | |
| Pliers for course dirt | 6.999-113.0 | |

# Technical specifications

| | | BD 50/70 R Classic Bp | BD 50/70 R Classic Bp PACK | BD 50/70 R Classic Bp | BD 50/70 R Classic Bp PACK |
|---|---|---|---|---|---|
| | | 1.161-075.0 | 1.161-080.0 | 1.161-076.0 | 1.161-079.0 |
| | | CN | CN | KAP | KAP |
| **Power** | | | | | |
| Nominal voltage | V | 24 | 24 | 24 | 24 |
| Battery capacity | Ah (3h) | - | 120 | - | 120 |
| Average power consumption | W | 1400 | 1400 | 1400 | 1400 |
| Nominal power engine | W | 300 | 300 | 300 | 300 |
| Suction engine output | W | 600 | 600 | 600 | 600 |
| Brush engine output | W | 500 | 500 | 500 | 500 |
| Type of protection | | IPX 3 | IPX 3 | IPX 3 | IPX 3 |
| **Vacuuming** | | | | | |
| Cleaning power, air quantity | l/s | 17 | 17 | 17 | 17 |
| Cleaning power, negative pressure, max. | kPa | 120 | 120 | 120 | 120 |
| Suction vacuum width | mm | 850 | 850 | 850 | 850 |
| **Cleaning brushes** | | | | | |
| Brush diameter | mm | 510 | 510 | 510 | 510 |
| Brush speed, loaded | 1/min | 155 | 155 | 155 | 155 |
| Brush speed, unloaded | 1/min | 180 | 180 | 180 | 180 |
| **Dimensions and weights** | | | | | |
| Driving speed, max. | km/h | 6 | 6 | 6 | 6 |
| Slope max. | % | 8 | 8 | 8 | 8 |
| Theoretical surface cleaning performance | $m^2/h$ | 5100 | 5100 | 5100 | 5100 |
| Volume, fresh water reservoir | l | 70 | 70 | 70 | 70 |
| Volume of waste water tank | l | 75 | 75 | 75 | 75 |
| Max. water temperature | °C | 50 | 50 | 50 | 50 |
| Ambient temperature | °C | 5...40 | 5...40 | 5...40 | 5...40 |
| Length | mm | 1310 | 1310 | 1310 | 1310 |
| Width (without vacuum bar) | mm | 590 | 590 | 590 | 590 |
| Height | mm | 1066 | 1066 | 1066 | 1066 |
| Permissible overall weight | kg | 340 | 340 | 340 | 340 |
| Transport weight (Tanks empty, without driver) | kg | 194 | 194 | 194 | 194 |
| **Surface load (with driver and full fresh water tank)** | | | | | |
| Front wheel | $N/cm^2$ | 102 | 102 | 102 | 102 |
| Rear wheel | $N/cm^2$ | 124 | 124 | 124 | 124 |
| **Values determined as per EN 60335-2-72** | | | | | |
| Vibration total value on arms | $m/s^2$ | <2,5 | <2,5 | <2,5 | <2,5 |
| Uncertainty K | $m/s^2$ | 0,2 | 0,2 | 0,2 | 0,2 |
| Vibration total value on seat area | $m/s^2$ | <0,5 | <0,5 | <0,5 | <0,5 |
| Uncertainty K | $m/s^2$ | 0,1 | 0,1 | 0,1 | 0,1 |
| Sound pressure level $L_{pA}$ | dB(A) | 66 | 66 | 66 | 66 |
| Uncertainty $K_{pA}$ | dB(A) | 2 | 2 | 2 | 2 |
| Sound power level $L_{WA}$ + Uncertainty $K_{WA}$ | dB(A) | 80,3 | 80,3 | 80,3 | 80,3 |

# Accessories and Spare Parts

Only use original accessories and spare parts, they ensure the safe and trouble-free operation of the device.
For information about accessories and spare parts, please visit www.kaercher.com.

在您第一次使用您的设备前，请先阅读并遵守本操作说明书原件，为日后使用或其他所有者使用方便请妥善保管本说明书。

## 目录


| | | |
|---|---|---|
| 安全说明 | ZH | 1 |
| 功能 | ZH | 2 |
| 合乎规定的使用 | ZH | 2 |
| 环境保护 | ZH | 2 |
| 质量保证 | ZH | 2 |
| 控制元件 | ZH | 3 |
| 设备运作前 | ZH | 3 |
| 设备运作 | ZH | 4 |
| 运输 | ZH | 5 |
| 储存 | ZH | 6 |
| 保养与维护 | ZH | 6 |
| 故障排除 | ZH | 7 |
| 配件 | ZH | 7 |
| 产品规格 / 参数 | ZH | 8 |
| 附件和备件 | ZH | 8 |


## 安全说明

本设备允许在 “ 技术数据 ” 一节规定的最大斜度的平面上运行。

⚠ *警告*

*操作员必须接受适当的设备使用指导。*
*必须稳妥地关停设备。*

- 设备上相应的警告、指示标志为无风险的运行提供重要提示。
- 除了操作说明书里的提示外，还要遵守立法的一般安全和事故防范规定。
- 让儿童远离包装薄膜，否则会有窒息危险！

### 安全装置

安全装置用于保护使用者，不得停止运行或不让其发挥功能。

**座椅开关**

如果操作员在工作运行过程中或在行驶期间离开座位，就要在短时延迟后关停行走电动机。

### 设备上的符号

| | |
|---|---|
| | ⚠ *危险*<br>*在充电过程中有电击危险。不要取下电池电极上的电极防护盖，注意确保正确安装。* |

### 危险等级

⚠ *危险*

*即刻引发威胁的危险，致使身体严重伤害或死亡。*

⚠ *警告*

*潜藏的危险情况，可能致使身体严重伤害或死亡。*

⚠ *小心*

*提示可能导致轻度伤害的危险状况。*

*注意*

*提示可能产生财产损失的危险状况。*

### 通电

⚠ *危险*

- *电源电压必须跟型号标牌上给出的电压一致。*
- *保护等级 I-- 设备只能按规定连接到接地电源。*
- *在液体工作时 （例如清洁剂），我们推荐使用带故障电流安全开关 （最大电流为 30 毫安）的插座为接口。*
- *必须使用制造商规定的电源连接导线，备用电线也不例外。设备订单编号和型号详见操作说明书。*
- *每次运行前都要测试一下带插头的连接导线是否有损坏。损坏的连接导线应立即让已授权的客户服务处 / 电气专业人员进行更换。*
- *本设备只能根据 IEC 60364-1 由电工连接到电气接口。*
- *决不能用湿的手触摸电源插头。*
- *需要注意的是，不得碾压、压挤、拖拽或通过诸如此类的行为损坏电源连接导线或延长线缆。保护线缆使其远离热气、油以及锐利的边缘。*
- *定期检查电源连接导线是否损坏，比如开裂或老化。一旦确定有损坏，则必须在继续使用前更换线缆。*
- *更换电源连接导线或延长线缆的连接器时必须确保防水和机械的坚固性。*
- *不可用橡皮管喷水或者高压喷水清洗设备 （短路危险或其他损坏）。*

*注意*

- *通电过程会短时间内使电压降低。*
- *不适宜的电源条件可能导致其他设备的损伤。*
- *当电源阻抗小于 0.15 欧姆时，无故障产生。*

### 应用

⚠ *危险*

- *在使用设备及其装配，特别是电源连接导线和延长线缆前应先检查它们的规定状态和操作安全性。如果设备状态有疑问，立刻拔下电源插头。不允许使用设备。*
- *定期清洁水位控制器并检查是否有损坏的迹象。*
- *决不可用于易爆的液体、易燃的气体、易爆的粉尘或未经稀释的酸和溶媒等物的喷洒和吸收！另外，汽油、燃烧油等和吸入空气搅动时，可能会生成爆炸性气体或混合物。此外，丙酮、未稀释的酸和溶媒会腐蚀设备上使用的原料。*
- *不得使用设备清扫燃烧中的或炽热的物体。*
- *不可用本设备抽吸人和动物。*
- *低温情况下，设备不可在户外使用。*
- *在危险区域 （如加油站）使用设备时要注意相关的安全规定。禁止在有爆炸危险的空间内运行本设备。*
- *只可使用生产商推荐的清洁剂，同事要注意清洁剂厂家的使用、清除提示和警告。*
- *推荐的洗涤剂不可未经稀释直接使用。该产品可以安全使用，因为其不含酸性、碱性或污染环境的材料。我们建议，洗涤剂应远离孩童妥善保管。洗涤剂若是不慎溅入眼睛，必须及时用清水冲洗；若吞咽则应立即就医。*

⚠ *小心*

- *该设备不适合用于清洁有损身体健康的粉尘。*
- *在处理污水比如洗涤液时应注意相关法律规定。*

*注意*

- *如有可能，设备的插座只允许使用操作说明书中提到的配件和附件进行连接。*
- *该设备不是吸尘器！吸入的液体并不多于喷洒出来的。不可用于干物吸收！*
- *设备适用于最大水位约为 1 cm 的湿润或潮湿地面。当超过最大水位，存在危险时，不得在此区域内行驶。*
- *该设备仅适用于操作说明书中已鉴定的涂层。*
- *设备防寒保护。*

### 操作说明

⚠ *危险*

- *操作人员按照规定使用本设备。同时要重视地方现行的规定并在设备工作时照顾好第三者，特别是儿童。*
- *设备运行期间不可无人看管。 操作人员只有在电机停机、防止设备意外运动才可离开设备，如有必要，操作定位制动器并拔除点火钥匙 / 智能钥匙。*
- *始终戴上合适的手套在机器上进行工作。*
- *机器配备有点火钥匙和智能钥匙。为防止擅自使用机器，须拔除点火钥匙 / 智能钥匙。*
- *本设备不得由身体能力有限、感官能力弱或理解能力差或缺乏经验和 / 或缺乏知识的人员 （包括儿童）使用。*
- *照看好儿童，以确保他们不用设备玩耍。*
- *如设备不密封，应立即关闭。*
- *注意！产生泡沫或液体时立即关闭设备！*
- *发动机运行时不可打开顶罩。*
- *在斜面上，斜面和行驶方向上的倾斜角不可大于操作说明书中给出的数值。*

### 运输

⚠ *警告*

*设备运输时发动机是停止的并注意务必绑牢设备。*

### 维护

⚠ *危险*

- *清洁和保养设备、更换零件或切换到另一功能前，必须关闭设备。必须拔下用电设备的电源插头，拔下电池供电设备的电池插头或拆下电池。*
- *只允许已授权的客户服务处或熟知该领域所有重要安全规定的专业人员进行设备修复工作。*
- *请注意根据地方针对不稳定工业使用设备的有效规定进行安全检查。*

### 附件和备件

⚠ *危险*

*只允许使用生产商提供的配件和备件。原始配件和原始备件可以确保设备安全无故障地运行。*

### 带旋转刷 / 皮带轮的设备

⚠ *危险*

- *仅使用设备配备的或操作说明书中明确规定的旋转刷 / 皮带轮。使用其他刷子 / 皮带轮会影响设备的安全性。*
- *需要注意的是，当带有旋转刷 / 皮带轮的清洁头运行时，不得碾压损坏电源连接导线或延长线缆。*

### 上升设备

⚠ *危险*

- *上升设备不可用于公众的道路交通。请向您的供货商询问具备道路许可的新装备。*
- *该设备不允许携带护送人员。*

– *上升设备只可设置为从底座升起运动。*
– *请注意操作说明书中关于汽油发动机设备的特别安全技巧。*
– *在操作人员可能被落物击中的区域内，若无落物保护结构（FOPS）不得使用该设备。*

### 电池操作设备

⚠ *危险*
– *一定要注意电池和充电器生产商的使用说明书。请注意立法部门在电池方面的规定。*
– *不可以在电池上堆放器械或其他类似物品。短路和爆炸危险。*
– *任何情况都不能在电池附近或在电池配电室内公然使用火焰、引起火花或抽烟。爆炸危险。*
– *使用电瓶酸时要小心谨慎。请注意相关的安全准则！*
– *根据EG-指南91/157 EWG或各国的规定，环保地处理耗光的电池。*

*注意*
– *决不使电池组一直处于放电状态，而应该尽可能快地进行再充电。*
– *为避免漏电，电池必须始终保持清洁和干燥。不受污染保护，如使用金属粉末。*

## 功能

本磨边清洗机用于对平整地面进行湿式清洁。
– 本设备可通过调节水量和清洁剂量轻松应对各种清洁任务。
  可通过将清洁剂添加到储罐中对其进行计量。
– 本设备配备一个清水箱和一个污水箱（各 70 升）。这种设计可在较长的使用时间内确保有效的清洗作业。
– 510 mm 的作业宽度，可在较长的使用时间内确保有效工作。
– 根据配置情况，可选择不同的电池（在此参见章节“建议的电池”）

**提示：**
根据清洁任务的不同，设备可装配不同的附件。
请查阅我们的附件目录或访问我们的网站 www.kaercher.com。

## 合乎规定的使用

本设备适合于商业和工业使用，如饭店、学校、医院、工厂、商店、办公室和出租业务。
请只根据本操作说明书中的说明使用本设备。
– 本设备只能被用于清洁对湿度和摩擦不敏感的光滑地面。
– 本设备用于在室内使用。
– 使用的温度范围从 +5° C 到 +40° C。
– 本设备不适用于清洁冰冻地面（例如在冷冻房内）。
– 本设备只允许配置原配附件和备件。
– 该设备不适用于清洁公共交通道路。
– 本设备不得在对压力敏感的地面上使用。要注意考虑地面允许的单位面积负荷。技术数据中规定了设备的单位面积负荷。
– 本设备不适合用在有爆炸危险的环境中。
– 不能使用本设备吸收可燃性气体、未稀释的酸或溶剂。
  其中包含汽油、颜料稀释剂或燃料油，因为在涡流的作用下，这些物质会与抽吸空气构成易爆的混合物。此外还包含丙酮、未稀释的酸和溶剂，因为它们会侵蚀设备中所使用的材料。

## 环境保护

| | |
|---|---|
| | 包装材料可以回收利用。请不要把包装材料与普通垃圾放在一起处理，而应妥善安排回收。 |
| | 旧的设备中含有宝贵的可再利用的材料，应加以利用。电池、油以及类似物质不得排放到环境中。请通过适当的收集系统清理旧设备。 |

**内部材料提示（REACH）**
最新的内部材料信息请您在如下链接中查找：
*www.kaercher.com/REACH*

## 质量保证

我们的质量保证条款适用于全球各分公司。在质量保证期内，如果您的产品发生了任何故障，我们都将为您提供免费维修，但是这种故障应当是由于机身材料或制造上的缺陷造成的。请您向经销商或者与您距离最近的经过授权的客户服务处联系，提出保修请求，并提供相应的产品购买证明文件。

# 控制元件

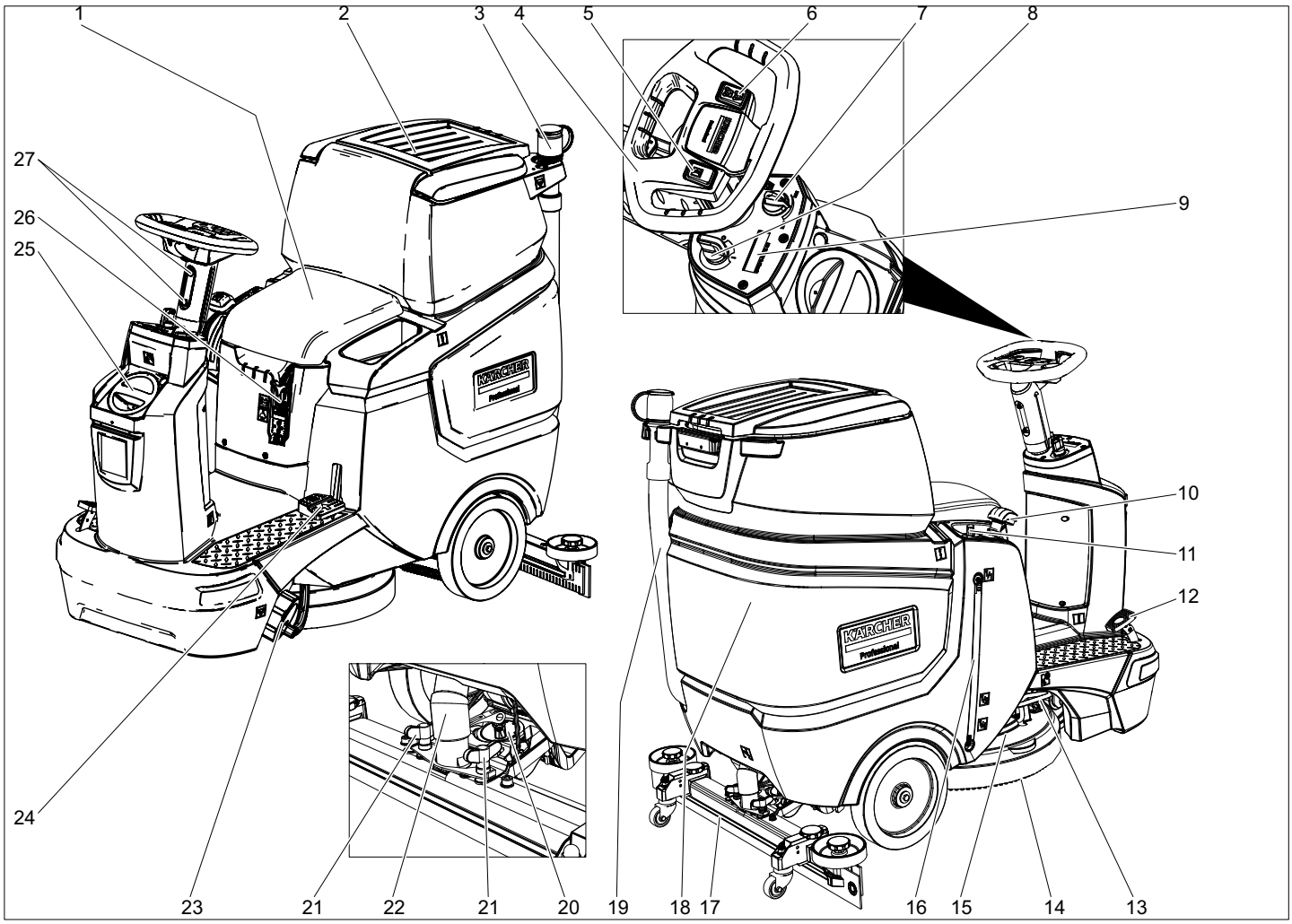


1 座位
2 污水箱盖
3 污水计量装置
4 方向盘
5 喇叭按钮
6 行驶方向开关
7 工作速度旋钮
8 带钥匙开关
9 显示屏
10 吸水扒手柄
11 水量调节旋钮
12 油门脚踏
13 刷子更换用踏板
14 盘刷
15 清洁头
16 新水液位指示
17 吸尘架
18 污水箱
19 污水排水软管
20 用于倾斜吸尘架的转动手柄
21 用于固定吸尘架的翼形螺母
22 抽吸软管
23 清水箱封盖，水箱配备清水过滤器
24 升 / 降清洗头的踏板
25 净水箱盖子
净水加水口
26 电池插头
27 方向盘高度调节

## 颜色标识

– 用于清洗过程的操作元件为黄色。
– 用于保养和服务的操作元件为浅灰色。

## 设备上的符号

| | |
|---|---|
| | 电池插头 |
| 1/4 | 净水箱液位 25% |
| | 清洁液计量 |
| | 升 / 降清洁头 |
| | 刷子更换用踏板 |
| | 升 / 降吸水扒 |
| | 拖把固定架 ** |
| | 净水箱排放口 |
| | 污水箱排放口 |
| | 捆绑点 |

** 选配

# 设备运作前

## 电池

| | |
|---|---|
| | *注意电池上、使用说明书和汽车操作说明书中的提示* |
| | *戴上防护眼镜* |
| | *让儿童远离酸和电池* |
| | *爆炸危险* |
| | *禁止火焰、火花、明光和抽烟* |
| | *腐蚀危险* |

| | |
|---|---|
| | *急救* |
| | *警示* |
| | *清理* |
| Pb | *不要将电池扔到垃圾桶内* |

⚠ *危险*

*存在爆炸危险！*
*不可以在电池上堆放器械或其他类似物品。短路和爆炸危险。*
*受伤危险。切勿让伤口接触到铅。在电池上结束工作后始终要洗手。*

### 放入电池组并连接妥当

使用 “ 电池箱 ” 款型时电池组已安装。
➔ 拔出电池插头。
➔ 将污水箱向后旋转。

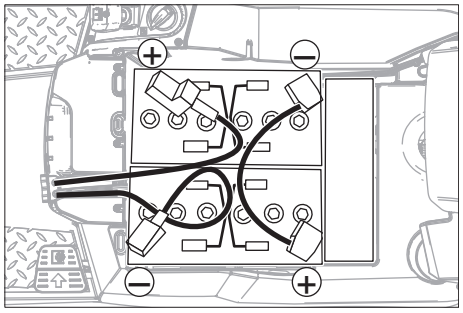

***注意***

*有损坏危险。注意电极是否正确。*
➔ 使用随机供货的连接电线连接电极。
➔ 将随机供货的连接电线卡到尚未接线的电池 （＋）和 （－）电极上。
➔ 检查电极防护盖安装是否正确。
➔ 插入电池插头。

***注意***

*深度放电有损坏危险。在调试本设备前应给电池充电。*

### 电池充电

**提示：**
本设备配备一个深度放电保护装置，即如果电容量已达到尚允许的最低限度，设备也只能够行驶。
刷子驱动装置和吸尘机均停止工作。
➔ 将本设备直接驶至充电站，同时应避开斜坡。

**提示：**
使用其他电池组 （例如第三方制造商）时，Kärcher 公司客服人员必须为相应的电池组重新调整深度放电保护装置。

⚠ *危险*

*有电击危险。注意电网和熔丝保护 – 参见 “ 充电器 ”。*
*仅在通风充分的干燥空间内使用充电器！*

**提示：**
平均充电时间约为 10-12 小时。
推荐使用的充电器 （与各自使用的电池组相配）均由电子控制并且自动结束充电过程。

⚠ *危险*

*有爆炸危险。放置电池充电器的空间必须具有视电池型号而定的最小体积和最小气流通风 （参见 “ 建议使用的电池 ”）。*
*有爆炸危险。只有在掀起污水箱后，才允许给湿式蓄电池充电。*
➔ 将污水箱排空。
➔ 将钥匙开关调至 “0” 位并拔下钥匙。
➔ 将污水箱向后旋转。

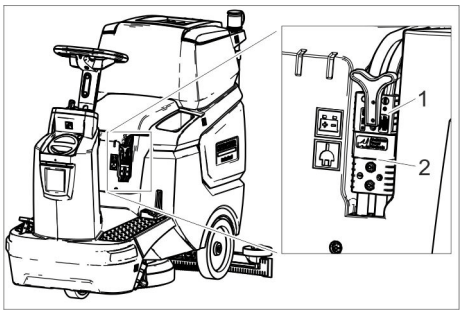


1 电池插头，电池侧
2 电池插头，设备侧

➔ 拔下电池侧电池插头。

***注意***

*有损坏危险！*
– *不要将充电器与设备侧的电池插头相连。*
– *只能使用与所安装电池型号相匹配的充电器：*

**提示：** 仔细阅读充电器制造商操作说明书，特别要注意遵守安全提示！
➔ 将电池侧电池插头与充电器相连。
➔ 将充电器的电源插头插在插座中。
➔ 根据充电器操作说明书中的说明进行充电。

### 低维护型电池 （湿式电池）

➔ 在充电过程结束前一个小时，添加蒸馏水，注意正确的酸液液位。在电池上做相应的标记。充电过程结束时所有的电池必须鼓冷风。

⚠ *危险*

*腐蚀危险。如果在电池放电状态下补充加水，则可能会导致酸液泄漏！*
*在处理电池酸液时戴上防护眼镜并注意各项规范，以免受伤和损坏衣服。*
*一旦酸液溅到皮肤上，则立即用大量水冲洗掉。*

***注意***

*在给电池补充加水时，只能使用蒸馏水或去离子水 （EN 50272-T3）。*
*不要使用外部添加剂 （即所谓的改进剂），否则将取消各项质量保证。*

### 最大电池尺寸

| | |
|---|---|
| 长度 | 408 |
| 宽度 | 348 |
| 高度 | 284 |

## 拆卸电池

➔ 将钥匙开关转到 “0” 位。
➔ 拔出电池插头。
➔ 将污水箱向后旋转。
➔ 取下电池负极的电线。
➔ 取下电池的剩余电线。
➔ 取出电池。
➔ 根据所适用的规定清理废旧电池。

## 安装毛刷

毛刷安装在 “ 保养作业 ” 一章中详细说明。

## 装配吸尘架

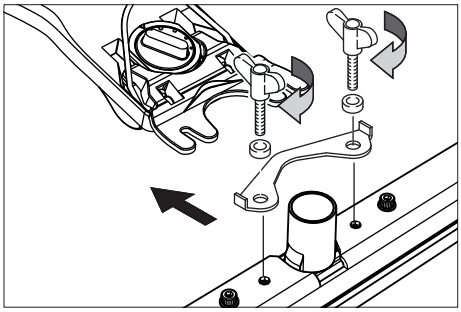

➔ 将吸尘架放到吸尘架悬挂装置中时，应使钢板位于悬挂装置上。
➔ 拧紧翼形螺母。
➔ 插上抽吸软管。

## 调节方向盘

➔ 松开方向盘高度调节的两个螺栓。
➔ 将方向盘调节到所需高度。
➔ 拧紧两个螺栓。

# 设备运作

***注意***

*有损坏危险！*
*在工作期间不得脱开电池插头。*

**提示：**
紧急停止运转所有功能时，应将钥匙开关调至 “0” 位。

## 启动设备

➔ 操作员在座椅位置上就位。
➔ 将钥匙开关调至 “1” 位。

屏幕依次显示：
– 至下一次客服时间
– 操作面板软件版本
– 电池充电状态和工作小时数

## 检查手动制动器

⚠ *危险*

*有事故危险。在每次运行之前必须检查平面上的手动制动器功能。*
➔ 启动设备。
➔ 将行驶方向转换开关调至 “ 前进 ” （Vorwärts）位置。
➔ 轻轻地踩下驾驶踏板。
➔ 必须能够听到制动器解锁的声音。设备必须在平面上略微滚动。如果松开踏板，能够听到制动器制动的声音。如果不符合上述情况，则必须停止运行设备，并联系客服部门。

## 行走

⚠ *危险*

*有事故危险。设备未显示制动作用时，则按以下步骤进行操作：*
➔ 如果设备在超过 2% 斜坡上不能停止，不得将钥匙开关设置到 0 位。必须继续操作设备，直至其达到水平面。
➔ 达到水平面后，必须停止运行设备，并联系客服部门。
➔ 此外，还必须注意遵守制动器保养提示。

⚠ *危险*

*坡度过大时有倾翻危险。*
➔ *沿行驶方向仅限在 8% 以内的斜坡行驶。在斜坡和斜面上只能纵向行驶，不得转弯。*

*急转弯行驶时有倾翻危险。*
*地面湿滑时有侧滑危险。*
➔ *转弯时应缓慢行驶。*

*地表不稳固时有倾翻危险。*
➔ *只在稳固的地表上运行设备。*
*侧面坡度过大时有倾翻危险。*
➔ *垂直于行驶方向时仅限在最大 8% 以内的斜坡行驶。*

### 行走

➔ 操作员在座椅位置上就位。
➔ 将吸水扒手柄向上拉并使其卡入。
➔ 踩下清洗头踏板并使其卡入。
➔ 将钥匙开关调至 “1” 位。
➔ 通过方向盘上的行驶方向转换开关调整行驶方向。
➔ 踩下驾驶踏板来确定行驶速度。
➔ 停止设备：松开驾驶踏板。

**提示：**
当清洗头被提起时，最大速度不会受到工作速度旋钮的影响。
即使在清洗作业时，也不能够改变行驶方向。多次向前或向后行驶可加强对所选部位的清洗。

## 加入工作材料

### 洗涤剂

⚠ *警告*
*有损坏危险。只使用建议的清洁剂。如使用其它清洁剂，设备所有人在工作安全和事故危险方面将承担更高的风险。*
*只使用不含溶剂、盐酸和氢氟酸的清洁剂。*
*注意关于洗涤剂的安全提示。*

**提示：**
不要使用产生大量泡沫的清洁剂。

| 应用 | 清洁剂 |
|---|---|
| 所有耐水地板的日常清洁 | RM 746<br>RM 780 |
| 光亮表面 （例如花岗石）的日常清洁 | RM 755 es |
| 工业地面的保养清洁和初步清洁 | RM 69 ASF |
| 炻质砖的日常清洁和彻底清洁 | RM 753 |
| 在卫生范围内瓷砖的保养清洁 | RM 751 |
| 卫生领域内的清洁和消毒 | RM 732 |
| 全部耐碱性地板去膜 （例如：PVC） | RM 752 |
| 油毡地板去膜 | RM 754 |

### 新鲜水

➔ 打开净水箱的盖子。
➔ 往水箱中注入一半清水 （最高温度 50 ° C）。
➔ 注入清洗剂。
➔ 往水箱中注水。
➔ 关上净水箱的盖子。

## 调节吸尘架

### 倾斜位置

为了改进地砖地面的吸尘效果，最大可将吸尘架转动到 5° 的倾斜位置。

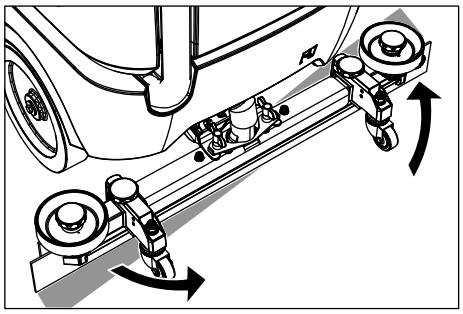

➔ 松开翼形螺母。
➔ 转动吸尘架。
➔ 拧紧翼形螺母。

### 倾斜度

如果抽吸效果不够，则可以改变直吸尘架的倾斜度。

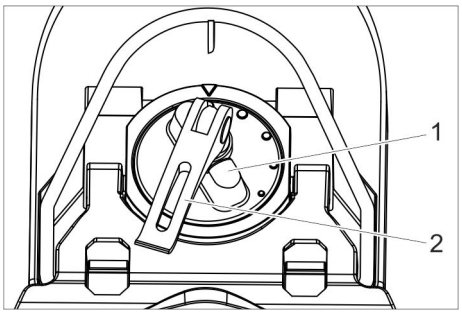


1 转动手柄
2 拉紧杆

➔ 提起拉紧杆。
➔ 调整用于倾斜吸尘架的转动手柄。
➔ 将拉紧杆向下按压。

### 高度

与地板相接触时，可利用高度调整机构影响吸嘴的弯度。

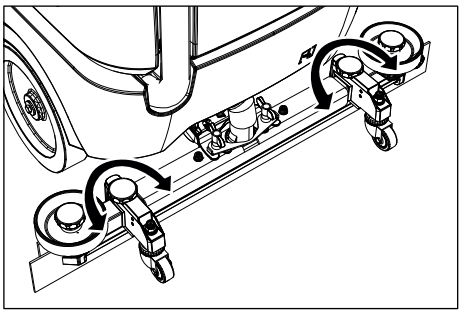

➔ 尝试性调整高度调整机构的转动手柄，直至达到最好的抽吸效果。

## 调节水量

➔ 根据地板铺层的污染程度，通过调节按钮调节水量。

**提示：**
使用低水量尝试进行第一次清洁。逐步增加水量，直至达到所需的清洁效果。

## 清洗作业

➔ 操作员在座椅位置上就位。
➔ 将钥匙开关调至 “1” 位。
➔ 通过方向盘上的行驶方向转换开关调整行驶方向。
➔ 将工作速度旋钮转到所需的数值。
速度在调整过程中会显示在屏幕上。
最高速度以百分比显示。
➔ 通过调节阀调节用水量。
➔ 将吸水扒操控杆的手柄的下半部向上拉，并固定住。
➔ 将吸水扒操控杆向下按。
吸水扒被降下，吸尘机启动。
➔ 向下 / 向右踩下清洗头踏板、脱开并且使其向上。
➔ 踩下驾驶踏板来确定行驶速度。
清洗头被降下，刷子驱动装置启动并喷洒清洗液。
➔ 在待清洗的表面上移动。
➔ 停止设备：松开驾驶踏板。

### 结束清洁

➔ 踩下清洗头踏板，直至其卡入。
➔ 继续行驶一小段距离，以抽吸剩余用水。
➔ 将吸水扒操控杆向上拉，直至其卡入为止。
吸尘涡轮机延时运转 10 秒后即关闭。
➔ 将钥匙开关转到 “0” 位。

## 将污水箱排空

**提示：**
污水箱已满时，浮子会封住吸尘口，导致吸尘涡轮机转速加快。

⚠ *警告*
*注意当地废水处理规范。*
➔ 从支架上取下污水排水软管并放到一个合适的集水装置上。

**提示：**
挤压计量装置可控制污水流量。

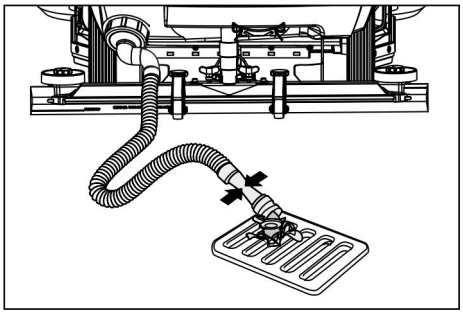

➔ 通过打开排水软管上的计量装置排水。
➔ 接着用清水冲洗污水箱。

## 将净水箱排空

➔ 拧下清水箱盖。
➔ 排放清水。
➔ 拧上清水箱盖。

## 关闭设备

➔ 必要时，给电池充电。

# 运输

⚠ *危险*
*存在受伤危险！装货和卸货时，只能将设备运行至允许的最大斜度上 （参见 “ 技术数据 ”）。缓慢移动。*

⚠ *小心*
*受伤和损坏危险！运输时要注意设备的重量。*
➔ 在装载清水箱之前，应将清水箱和污水箱清空。
➔ 将刷盘从刷头上取下。

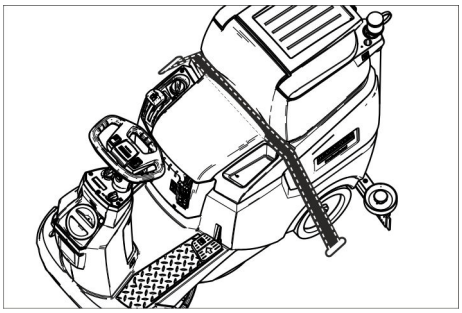

➔ 用车辆进行运输时，根据各适用准则确保设备不会滑倒和倾覆。

## 推动设备。

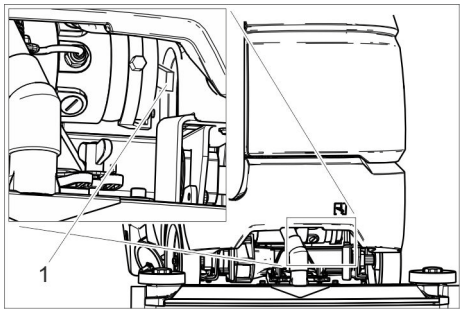


1 释放杆

➔ 将释放杆向上按并推动设备。

⚠ *危险*

*制动功能失灵会造成事故危险。*
*推动设备后，务必要将释放杆重新向下按压。*

# 储存

⚠ *小心*

*受伤和损坏危险！ 存放时要注意设备的重量。*

➔ 该设备只能存放在室内。
➔ 选择停放位置时应考虑所允许的设备总重量，避免影响稳定性。

# 保养与维护

⚠ *危险*

*有受伤危险！在设备上执行所有作业前，要将钥匙开关调至 “0” 位并拔下钥匙。拔下电池插头。*

➔ 排放并清理污水和剩余的新鲜水。

⚠ *小心*

*吸尘涡轮机惯性运行可能会造成受伤危险。吸尘涡轮机关停后还会惯性运行一段时间。只有在吸尘涡轮机停止运转之后，方可执行保养作业。*

## 保养计划

### 在工作结束后

*注意*

*有损坏危险。不要对设备喷水并且不要使用有侵蚀性的清洁剂。*

➔ 排出污水。
➔ 用清水冲洗污水箱。
➔ 清洁粗大污染物滤网。
➔ 使用浸泡过柔和性洗衣肥皂水的湿抹布清洁设备外部。
➔ 清洁吸嘴，检查是否磨损，如有需要，即行更换。
➔ 检查刷子是否磨损，必要时更换。
➔ 给电池充电：
如果充电状态低于 50%，必须给电池完全充电并且没有间断。
如果充电状态高于 50%，只有当下次使用需要充足运行时间时，才能给电池再次充电。

### 每周的

➔ 定期使用时，至少每周给电池完全充电一次并且没有间断。

### 每月保养

➔ 清空清水箱并冲洗沉积物。
➔ 清洗清水过滤器。
➔ 清洁浮子。
➔ 清洗细滤网。
➔ 设备暂时停机时：进行电池的均衡充电。
➔ 检查电池电极的氧化情况，必要时进行刷洗。注意连接电线是否固定定位。
➔ 清洁污水箱与盖子之间的密封件的状态并检查是否密封，如有需要，即行更换。
➔ 如系免保养型电池，则检查电池的酸液密度。
➔ 较长时间停机时，只有给电池完全充电后才能存储设备。至少每月一次给电池重新完全充电。

### 每年

➔ 让客户服务部门进行规定的检查。

## 保养工作

### 保养合同

为了保障设备可靠运行，可与 Kärcher 公司主管销售处签订保养合同。

### 清洗浮子和细滤网。

➔ 打开污水箱盖子。

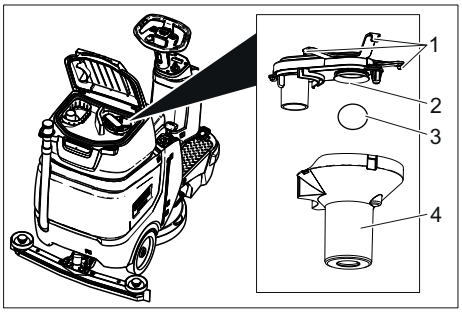


1 吊钩
2 毛绒过滤器
3 浮子
4 浮子外壳

➔ 松开吊钩。
➔ 向下拉出浮子室。
➔ 将浮子从浮子室中取出，然后清洗。
➔ 清洗细滤网。
➔ 按相反顺序重新组装所有部件。

### 清洗粗大污染物滤网

➔ 打开污水箱盖子。

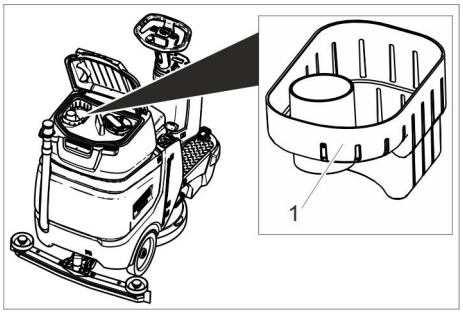


1 粗大污染物滤网
➔ 将粗大污染物滤网向上拉出。
➔ 将粗大污染物滤网放到自来水下冲洗。
➔ 将粗大污染物滤网重新装到污水箱上。

### 更换吸嘴

➔ 取下吸尘架。
➔ 拧出星形柄。

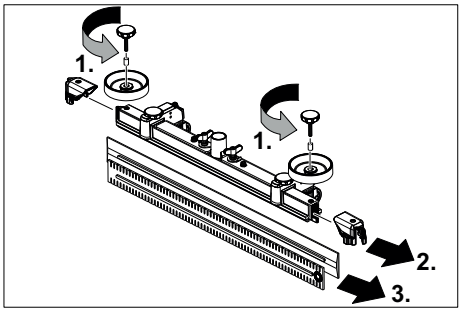


➔ 拔下塑料件。
➔ 拔下吸嘴。
➔ 推入新的吸水胶条。
➔ 插上塑料件。
➔ 拧上并拧紧星形柄。

### 更换盘刷

➔ 提起清洁头。
➔ 克服一定阻力，将刷子更换用踏板朝下压出。
➔ 将刷盘从清洗头下方侧面拉出。
➔ 将新的刷盘放到清洗头下方，向上按压并且使其卡入。

## 防冻

如果有冰冻危险：

➔ 将净水箱和污水箱排空。
将设备停放在防霜冻的房间内。

## 故障排除

⚠ *危险*
*有受伤危险！在设备上执行所有作业前，要将钥匙开关调至 “0” 位并拔下钥匙。拔下电池插头。*

➔ 排放并清理污水和剩余的新鲜水。

⚠ *小心*
*吸尘涡轮机惯性运行可能会造成受伤危险。吸尘涡轮机关停后还会惯性运行一段时间。只有在吸尘涡轮机停止运转之后，方可执行保养作业。*

| 故障 | 排除故障 |
|---|---|
| 不可以启动设备 | 不要操作座椅开关，而是应坐在座椅上。<br>只有当操作人员坐在座椅上时，设备才开始工作。 |
| | 插入电池插头。 |
| | 将钥匙开关调至 “1” 位。 |
| | 在打开钥匙开关后，把脚从加速踏板上拿开。如果仍出现故障，应立即联系客户服务部门。 |
| | 检查电池，必要时充电。 |
| 扫雪机不行驶。 | 将释放杆向下按 （参见 “ 运输 / 推动设备 ”）。 |
| 水量不够 | 通过水量调节按钮提高水量。 |
| | 检查新水水位，如有需要，即给水箱加水。 |
| | 清洁新水过滤器。 |
| | 检查软管是否堵塞，如有需要，即行清洁。 |
| 抽吸功率不够 | 污水箱已满，关闭设备并排空污水箱 |
| | 清洁污水箱与盖子之间的密封件，并检查其是否密封，必要时进行更换。 |
| | 检查细滤网上是否有污物，必要时进行清洗。 |
| | 清洁吸尘架上的吸嘴，如有需要，即行翻转或更换。 |
| | 检查吸水扒是否堵塞，必要时清除堵塞 |
| | 检查污水排放软管上的盖子是否关上。 |
| | 检查吸入管是否有堵塞物，如需要进行清洁。 |
| | 检查抽吸软管是否密封，如有需要，即行更换。 |
| | 检查污水排放软管是否密封。 |
| | 检查吸尘架的调整。 |
| | 将附加重物 （配件）加在吸水扒上。 |
| 清洁效果不够 | 检查刷子是否磨损，如有需要，即行更换。 |
| | 检查刷子型号和洗涤剂是否适用。 |
| 吸尘涡轮机转速可加速 | 清空污水箱。 |
| | 清洁浮子。 |
| | 检查 / 清洗细滤网。 |
| | 检查吸入管是否有堵塞物，如需要进行清洁。 |
| | 检查吸水扒是否堵塞，必要时清除堵塞 |
| 刷子不转动 | 检查刷子是否被异物卡住，必要时去除异物。 |
| **一旦发生通过本表不能排除的故障，即电告客户服务处。** | |

## 配件

| 名称 | 零件号 | 描述 |
|---|---|---|
| 盘刷，红色 （中等，标准） | 4.905-026.0 | 用于所有常见的清洁任务。 |
| 盘刷，红色 （中等，标准） | 9.753-021.0 | |
| 盘刷，天然棕毛 （软质） | 4.905-027.0 | 天然纤维材质，用于清洁和抛光。 |
| 盘刷，黑色 （硬质） | 4.905-029.0 | 适用于严重脏污的情况，用于彻底清洁。仅适用于不敏感的覆面。 |
| 软垫驱动圆盘 | 4.762-534.0 | 用于使用垫子进行清洁。带有快速更换联轴器和中控锁。 |
| 垫子，红色 （中等偏软） | 6.369-079.0 | 用于清洁或清洗所有地板。 |
| 垫子，绿色 （中等偏硬） | 6.369-078.0 | 用于清洁严重污染的地板和彻底清洁。 |
| 垫子，黑色 （硬质） | 6.369-077.0 | 适用于顽固污垢，用于彻底清洁。 |
| 垫子，米色 （轻微颗粒状） | 6.369-468.0 | 对硬质和弹性覆面进行抛光和更新。 |
| 垫子，米色 （天然发丝成分） | 6.371-146.0 | |
| 吸尘架，850 mm，直型 | 4.777-401.0 | |
| 吸尘架，850 mm，弯曲型 | 4.777-411.0 | |
| Homebase Box 套装 | 4.035-406.0 | |
| 轮廓标志灯 | 4.039-267.0 | |
| 旗舰管理模块 | 4.039-268.0 | |
| 袋式过滤器 | 4.039-269.0 | |
| 预清扫单元 | 4.039-270.0 | |
| 拖把架 | 4.039-271.0 | |
| 喷洒式拖把 | 5.999-045.0 | |
| 粗大污染物卡钳 | 6.999-113.0 | |

| | | BD 50/70 R Classic Bp | BD 50/70 R Classic Bp PACK | BD 50/70 R Classic Bp | BD 50/70 R Classic Bp PACK |
|---|---|---|---|---|---|
| | | 1.161-075.0 | 1.161-080.0 | 1.161-076.0 | 1.161-079.0 |
| | | CN | CN | KAP | KAP |
| **功率** | | | | | |
| 额定电压 | V | 24 | 24 | 24 | 24 |
| 电池容量 | Ah（3 小时） | - | 120 | - | 120 |
| 平均消耗功率 | 瓦 | 1400 | 1400 | 1400 | 1400 |
| 行走电机额定功率 | 瓦 | 300 | 300 | 300 | 300 |
| 吸尘电机功率 | 瓦 | 600 | 600 | 600 | 600 |
| 刷子电机功率 | 瓦 | 500 | 500 | 500 | 500 |
| 防护等级 | | IPX 3 | IPX 3 | IPX 3 | IPX 3 |
| **抽吸** | | | | | |
| 抽吸功率，空气量 | 升 / 秒 | 17 | 17 | 17 | 17 |
| 抽吸功率，负压（最大） | 千帕斯卡 | 120 | 120 | 120 | 120 |
| 吸耙宽度 | mm | 850 | 850 | 850 | 850 |
| **清洁刷子** | | | | | |
| 工作宽度 | mm | 510 | 510 | 510 | 510 |
| 刷子直径 | mm | 510 | 510 | 510 | 510 |
| 负载的刷子转速 | 1/ 分钟 | 155 | 155 | 155 | 155 |
| 无负载的刷子转速 | 1/ 分钟 | 180 | 180 | 180 | 180 |
| **尺寸和重量** | | | | | |
| 行驶速度，最高 | km/h | 6 | 6 | 6 | 6 |
| 地段坡度，最大 | % | 8 | 8 | 8 | 8 |
| 理论清洁效率 | $m^2/h$ | 5100 | 5100 | 5100 | 5100 |
| 净水箱容量 | l | 70 | 70 | 70 | 70 |
| 废水箱容积 | l | 75 | 75 | 75 | 75 |
| 最大水温 | ° C | 50 | 50 | 50 | 50 |
| 环境温度 | ° C | 5...40 | 5...40 | 5...40 | 5...40 |
| 长度 | mm | 1310 | 1310 | 1310 | 1310 |
| 宽度（不包括吸水扒） | mm | 590 | 590 | 590 | 590 |
| 高度 | mm | 1066 | 1066 | 1066 | 1066 |
| 允许的总重量 | 千克 | 340 | 340 | 340 | 340 |
| 运输重量（空水箱，不包括驾驶员） | 千克 | 194 | 194 | 194 | 194 |
| **单位面积负荷（包括驾驶员和满清水箱）** | | | | | |
| 前轮 | $N/cm^2$ | 102 | 102 | 102 | 102 |
| 后轮 | $N/cm^2$ | 124 | 124 | 124 | 124 |
| **根据 EN 60335-2-72 确定的数值** | | | | | |
| 手臂振动总值 | $m/s^2$ | <2,5 | <2,5 | <2,5 | <2,5 |
| 不确定度 K | $m/s^2$ | 0,2 | 0,2 | 0,2 | 0,2 |
| 座位区的振动总值 | $m/s^2$ | <0,5 | <0,5 | <0,5 | <0,5 |
| 不确定度 K | $m/s^2$ | 0,1 | 0,1 | 0,1 | 0,1 |
| 声压等级 $L_{pA}$ | A 级分贝 | 66 | 66 | 66 | 66 |
| 不安全性 $K_{pA}$ | A 级分贝 | 2 | 2 | 2 | 2 |
| 声功率电平 $L_{WA}$ + 不安全性 $K_{WA}$ | A 级分贝 | 80,3 | 80,3 | 80,3 | 80,3 |

## 附件和备件

只使用原厂配件和备件，它们能保证设备的安全和无故障运行。
有关配件和备件的信息请登录 www.kaercher.com。

# 保修卡

尊敬的用户：

非常感谢您选用Kärcher公司产品，我们愿竭力为您提供优质的服务。《保修卡》是保修产品的重要凭证，请您仔细填写此卡并妥善保存。如产品需要维修时，请提供此保修卡和发票原件。

购买日期：_____ 产品型号：_____

用户电话：_____ 产品序列号：_____

用户地址：_____ 经销商盖章：_____

服务热线：400-880-1060
服务邮箱：service@karcher.cn
官网地址：www.karcher.cn

扫一扫
关注官方微信

扫一扫获取
更多服务商信息

KÄRCHER

makes a difference

合格证

KÄRCHER

《保修卡》涂改无效，遗失不补。

# 保修条款

本条款所属内容是依据《中华人民共和国消费者权益保护法》、《中华人民共和国产品质量法》及其他相关规定编写，仅适用于 Kärcher公司在中国大陆销售的清洁产品。
为了维护您的合法权益，请在购机时向经销商索要有关发货票据及其他保修凭证。

1. Kärcher产品保修政策：在正确使用、操作的情况下，如产品确实存在由于产品材料、设计或制造引起的质量问题，请消费者凭有效发票和相关保修凭证按照规定可享受以下保修服务：

1) 对于Kärcher全系列清洁设备，自购机之日起12个月内，整机设备出现性能故障，可享受保修；
2) 如果丢失有效发货票或保修凭证，且不能提供有效凭据，您的设备将不能享受保修服务；
3) 用户申请保修服务时，请携带好原始发票及相关保修凭证，将设备连同附件一起送至卡赫授权服务中心进行保修。

2. 如果下述任何一种情况发生，消费者将不能享受保修服务（即本保修条款不予适用）

1) 超过保修有效期；
2) 无保修凭证或有效发货票的；
3) 保修凭证上的内容与商品实物标识不符或涂改的；
4) 非按产品使用说明书要求使用、维护、保养而造成损坏的；
5) 消费者擅自拆动或非卡赫授权服务人员拆开自行维修的；
6) 因不可抗力造成损害的，如地震、火灾等；
7) 产品的自然磨损及易损易耗件（包括但不限于外壳、高压管、密封件、喷嘴、单向阀、柱塞、刷子、扒头、过滤器、尘袋、传动皮带、齿轮等）；
8) 非卡赫原因造成的故障、缺陷或瑕疵，如外部电源不稳、电压过高、操作不当、搬迁、碰撞、跌落等；
9) 产品售出后运输过程中的损坏；
10) 设备无原厂标识，或原厂标贴上的订货号、序列号与卡赫公司所提供的设备订货号、系列号不一致的；
11) 一切未经卡赫公司许可的改版机型；
12) 其它因客户原因造成损坏的；

3. 保修期届满，卡赫公司或其授权的服务点将为用户提供有偿的维修服务；

4. 保修期内，产品出现质量问题的，用户应采取以下措施：

1) 用户应将产品连同附件送至卡赫公司授权的服务点或经销商处请求服务，同时携带有效发货票和保修凭证；有效发货票或保修凭证不得涂改，否则作废；
2) 用户也可拨打卡赫公司全国统一服务热线电话400-880-1060，以便获取正确的产品服务信息；
3) 如产品使用过程中，由其它网络提供的服务（如水、电、燃料等）致使设备无法使用或不能正确使用，用户应首先咨询这些网络的相关部门；
4) 往返卡赫授权服务点的一切费用由用户自行承担（销售时，经销商有另外承诺的除外）
5) 所有被维修替换下来的零件、部件和附件等归卡赫公司所有；从其它设备上拆除产品的相关费用应由用户承担，即该等费用不属于保修的范畴；
6) 保修期内所维修的部件已停产或淘汰，卡赫公司有权使用同档次或高档次产品进行替换；
7) 卡赫公司对产品的保修义务，无论本保修条款或其它书面说明可能隐含或表示的默认保修义务，都应当被理解为已经包含在或限于本保修条款所列的保修范围和保修期限；
8) 保修期内，用户按本保修条款享受保修服务是用户因产品缺陷所受损失的唯一补救措施；换言之，卡赫公司对用户的其它直接或间接损失（包括但不限于数据的丢失、期待的利益等）不负任何责任；
9) 卡赫的经销商或其代理人以及卡赫公司授权的服务点均无权代表卡赫公司承担超出本保修条款范畴的义务，亦无权放弃卡赫公司在本保修条款下的任何权力；

5. 中国有关法律的强制性规定适用于本保修条款；

6. 卡赫公司保留调整有关保修信息、产品功能及规范等的权利，恕不另行通知。

卡赫贸易（中国）有限公司
2021年01月01日

makes a difference

扫一扫
关注官方微信

客服热线: 400-880-1060
官网地址: www.karcher.cn

扫一扫获取
更多服务商信息