KÄRCHER

makes a difference

English..... 3

# High Pressure Cleaner
# Combustion Engine - Hot Water

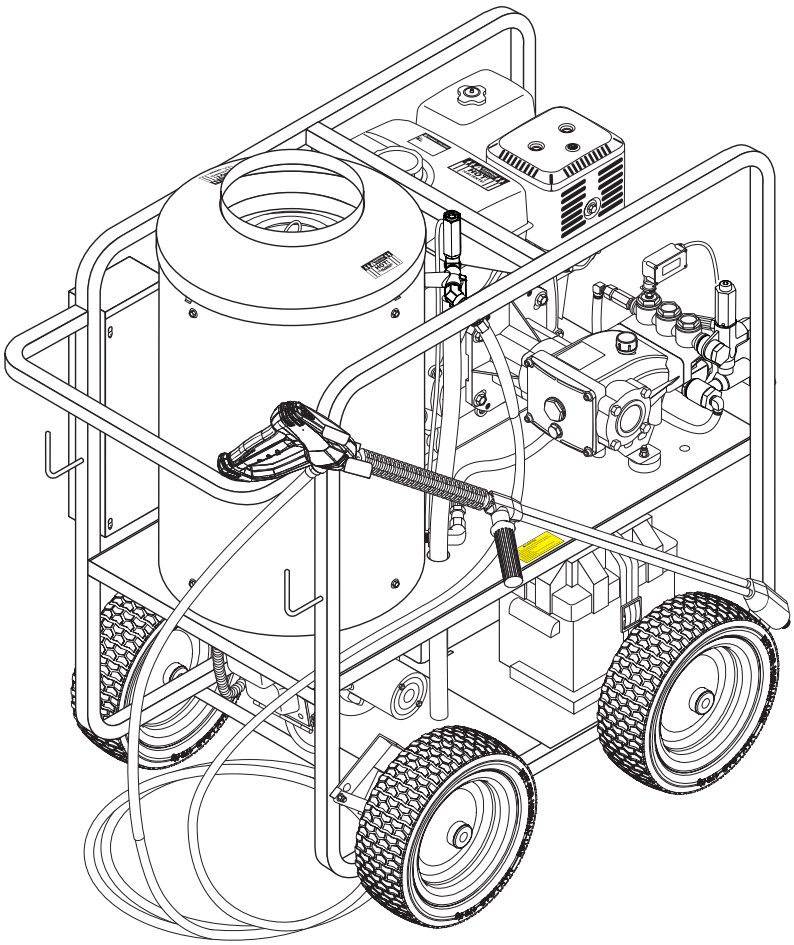

Register your product
www.kaercher.com/welcome

9.800-079.0 - V (04/26)

**MODELS:**

**1.575-555.0**
HDS 2.8/25 P Cage

**1.575-550.0**
HDS 2.6/30 P Cage

**1.575-551.0**
HDS 3.5/30 P Cage

**1.575-552.0**
HDS 3.5/30 PE Cage

**1.575-553.0**
HDS 3.5/35 PE Cage

**1.110-085.0**
HDS 3.5/35 P Cage CAL

# CONTENTS

Introduction & Important Safety Information ..... 4
Component Identification ..... 7
Assembly Instructions ..... 8
Operating Instructions ..... 9
Detergents and Cleaning Tips ..... 11
Shutting Down And Clean-Up ..... 12
Storage ..... 12
Maintenance ..... 13
Troubleshooting ..... 16
Maintenance Charts ..... 19
Oil Change Record ..... 19
Wiring Diagrams ..... 45

Model Number _____

Serial Number _____

Date of Purchase _____

The model and serial numbers will be found on a decal attached to the pressure washer. You should record both serial number and date of purchase and keep in a safe place for future reference.

# INTRODUCTION & IMPORTANT SAFETY INFORMATION

Thank you for purchasing this Pressure Washer.

We reserve the right to make changes at any time without incurring any obligation.

Owner/User Responsibility:

The owner and/or user must have an understanding of the manufacturer's operating instructions and warnings before using this pressure washer. Warning information should be emphasized and understood. If the operator is not fluent in English, the manufacturer's instructions and warnings shall be read to and discussed with the operator in the operator's native language by the purchaser/owner, making sure that the operator comprehends its contents.

Owner and/or user must study and maintain for future reference the manufacturers' instructions.

The operator must know how to stop the machine quickly and understand the operation of all controls. Never permit anyone to operate the engine without proper instructions.

**SAVE THESE INSTRUCTIONS**

**This manual should be considered a permanent part of the machine and should remain with it if machine is resold.**

**When ordering parts, please specify model and serial number. Use only identical replacement parts.**

**This machine is to be used only by trained operators.**

## IMPORTANT SAFETY INFORMATION

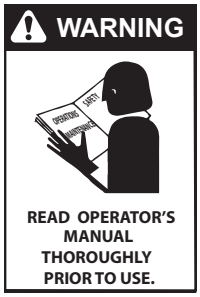


***WARNING: To reduce the risk of injury, read operating instructions carefully before using.***

1. Read the owner's manual thoroughly. Failure to follow instructions could cause malfunction of the machine and result in death, serious bodily injury and/or property damage.
2. Know how to stop the machine and bleed pressure quickly. Be thoroughly familiar with the controls.
3. Stay alert — watch what you are doing.

***WARNING: Keep wand, hose, and water spray away from electric wiring or fatal electric shock may result.***

4. All installations must comply with local codes. Contact your electrician, plumber, utility company or the selling distributor for specific details.

***WARNING: This machine exceeds 85 db appropriate ear protection must be worn.***

***WARNING: High pressure spray can cause paint chips or other particles to become airborne and fly at high speeds. To avoid personal injury, eye, hand and foot safety devices must be worn.***

5. Eye, hand, and foot protection must be worn when using this equipment.
6. Keep operating area clear of all persons.

***WARNING: Flammable liquids can create fumes which can ignite, causing property damage or severe injury.***

***WARNING: Risk of explosion — Operate only where open flame or torch is permitted.***

***WARNING: Risk of fire — Do not add fuel when the product is operating or still hot.***

***WARNING: Do not use gasoline crankcase draining or oil containing gasoline, solvents or alcohol. Doing so will result in fire and/or explosion.***

***WARNING: Risk of fire — Do not Spray flammable liquids.***

***WARNING: This product contains chemicals known to the state of California to cause cancer and birth defects or other reproductive harm. Operation of this equipment may create sparks that can start fires around dry vegetation. A spark arrestor may be required. The operator should contact: Local fire agencies for laws or regulations relating to fire prevention requirements.***

7. Allow engine to cool for 1-2 minutes before refueling. If any fuel is spilled, make sure the area is dry before testing the spark plug or starting the engine. (Fire and/or explosion may occur if this is not done).

Gasoline engines on mobile or portable equipment shall be refueled:

a. outdoors;

b. ith the engine on the equipment stopped;

c. with no source of ignition within 10 feet of the dispensing point; and

d. with an allowance made for expansion of the fuel should the equipment be exposed to a higher ambient temperature.

In an overfilling situation, additional precautions are necessary to ensure that the situation is handled in a safe manner.

***WARNING: Risk of injury. Disconnect battery ground terminal before servicing.***

8. When in use , do not place machine near flammable objects as the engine is hot.

9. Oil burning appliances shall be installed only in locations where combustible dusts and flammable gases or vapors are not present. Do not store or use gasoline near this machine.

10. Use No. 1 or No. 2 heating oil (ASTM D306) only. **NEVER** use gasoline in your fuel oil tank. Gasoline is more combustible than fuel oil and could result in a serious explosion. **NEVER** use crankcase or waste oil in your burner. Fuel unit malfunction could result from contamination.

11. Do not confuse gasoline and fuel oil tanks. Keep proper fuel in proper tank.

***WARNING: Risk of injury. Hot surfaces can cause burns. Use only designated gripping areas of spray gun and wand. Do not place hands or feet on non-insulated areas of the pressure washer.***

12. Transport/Repair with fuel tank EMPTY or with fuel shut-off valve OFF.

***WARNING: Hot discharge fluid. Do not touch or direct discharge stream at persons.***

***WARNING: This machine produces hot water and must have insulated components attached to protect the operator.***

13. To reduce the risk of injury, close supervision is necessary when a machine is used near children. Do not allow children to operate the pressure washer. **This machine must be attended during operation.**

***WARNING: Grip cleaning wand securely with both hands before starting. Failure to do this could result in injury from a whipping wand.***

14. Never make adjustments on machine while in operation.

15. Be certain all quick coupler fittings are secured before using pressure washer.

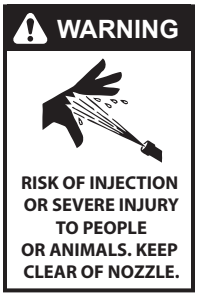


***WARNING: High pressure developed by these machines will cause personal injury or equipment damage. Keep clear of nozzle. Use caution when operating. Do not direct discharge stream at people or animals, or severe injury or death will result.***

***WARNING: Protect machine from freezing.***

16. To keep machine in best operating conditions, it is important you protect machine from freezing. Failure to protect machine from freezing could cause malfunction of the machine and result in death, serious bodily injury, and/or property damage. Follow storage instructions specified in this manual.

17. Inlet water must be clean fresh water and no hotter then 90°F.

***WARNING: Risk of asphyxiation. Use this product only in a well ventilated area.***

18. Avoid installing machines in small areas or near exhaust fans. Adequate oxygen is needed for combustion or dangerous carbon monoxide will result.

19. Manufacturer will not be liable for any changes made to our standard machines or any components not purchased from us.

20. The best insurance against an accident is precaution and knowledge of the machine.

***WARNING: Be extremely careful when using a ladder, scaffolding or any other relatively unstable location. The cleaning area should have adequate slopes and drainage to reduce the possibility of a fall due to slippery surfaces.***

21. Do not allow acids, caustic or abrasive fluids to pass through the pump.
22. Never run pump dry or leave spray gun closed longer than 1-2 minutes.
23. Machines with shut-off spray gun should not be operated with the spray gun in the off position for extensive periods of time as this may cause damage to the pump.
24. Protect discharge hose from vehicle traffic and sharp objects. Inspect condition of high pressure hose before using or bodily injury may result.
25. Before disconnecting discharge hose from water outlet, turn burner off and open spray gun to allow water to cool below 100° before stopping the machine. Then open the spray gun to relieve pressure. Failure to properly cool down or maintain the heating coil may result in a steam explosion.

***WARNING: Moving this machine on a incline may cause instability and could result in the machine tipping over. Equipment damage or body harm could occur.***

26. Do not overreach or stand on unstable support. Keep good footing and balance at all times.
27. Do not operate this machine when fatigued or under the influence of alcohol, prescription medications, or drugs.
28. In oil burning models, use only kerosene, No. 1 home heating fuel, or diesel. If diesel is used, add a soot remover to every tankful.

***Follow the maintenance instructions specified in the manual.***

# COMPONENT IDENTIFICATION

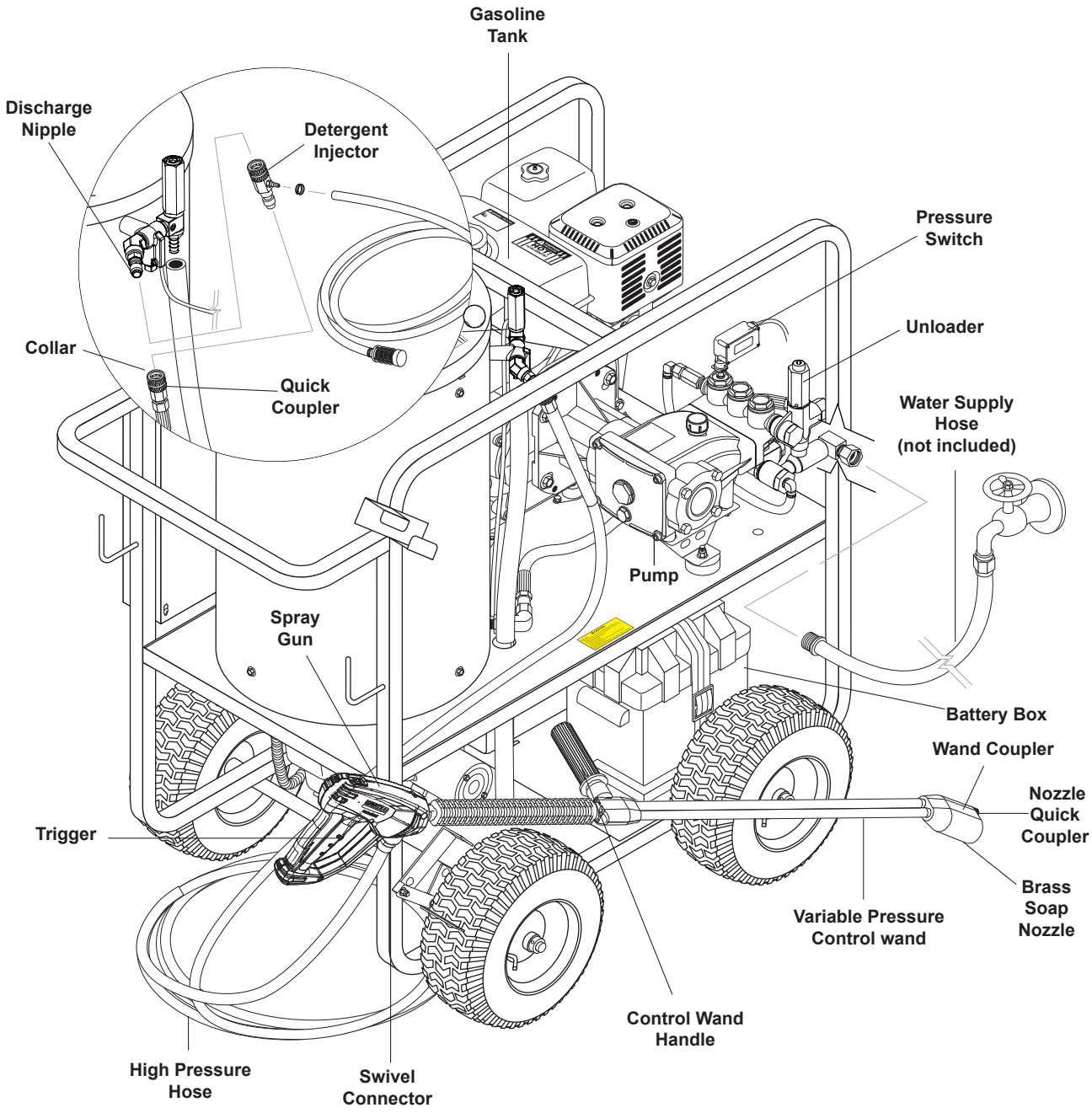


**Pump —** Develops high pressure.

**Starter Grip —** (Not Shown) Used for starting the engine manually.

**Spray Gun —** Controls the application of water and detergent onto cleaning surface with trigger device. Includes safety latch.

**Detergent Injector —** Allows you to siphon and mix detergents.

**Variable Pressure Control Wand —** Must be connected to the spray gun. This wand handle controls dishcharge flow from one tube to both wand tubes. When water is discharged from both tubes you will have a pressure loss and allows chemical siphoning when used in combination with a detergent injector.

**High Pressure Hose —** Connect one end to water pump discharge nipple and the other end to spray gun.

**Note: If trigger on spray gun is released for more than 2 minutes, water will leak from valve. Warm water will discharge from pump protector onto floor. This system prevents internal pump damage.**

# ASSEMBLY INSTRUCTIONS

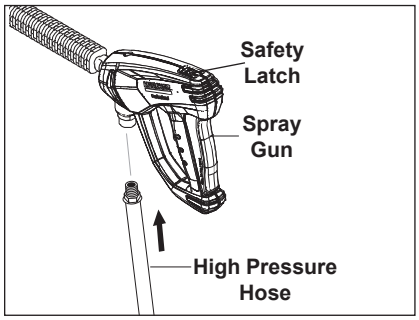


**STEP 1:** Attach the high pressure hose to the spray gun using teflon tape on hose threads.

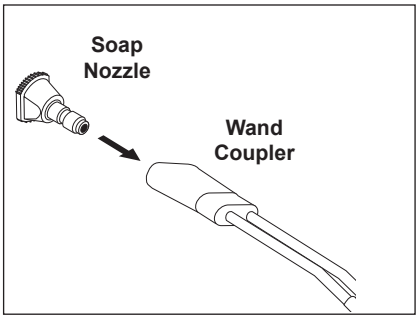


**STEP 2:** Pull the spring-loaded collar of the wand coupler back to insert your choice of pressure nozzle.

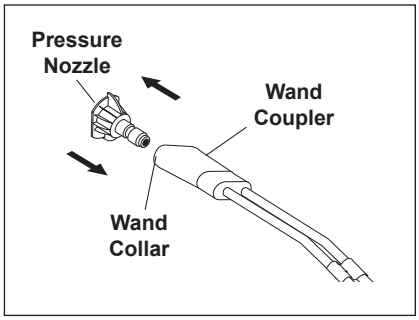


**STEP 3:** Release the coupler collar and push the nozzle until the collar clicks. Pull the nozzle to make sure it is seated properly.

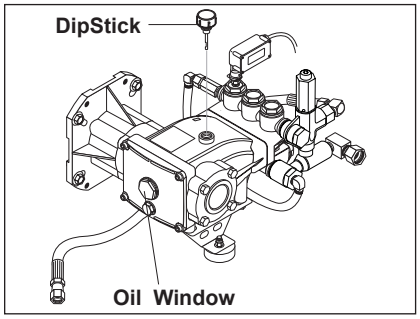


**STEP 4:** Remove shipping cap and install oil dipstick. Check pump oil level by using dipstick or observe oil level in oil window (if equipped). Use 30 wt. non detergent oil.

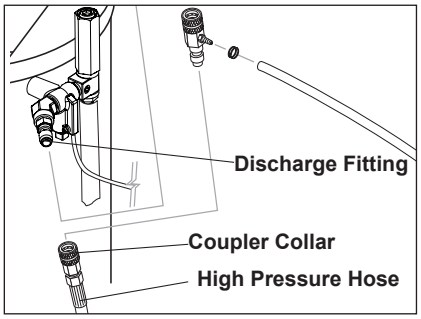


**STEP 5:** Connect the high pressure hose to the pump discharge fitting. Push coupler collar forward until secure.

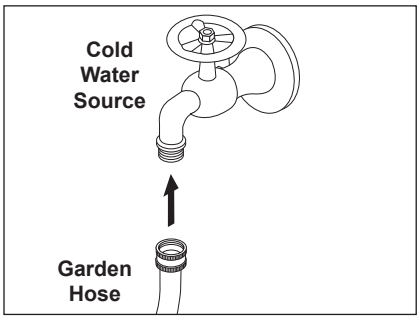


**STEP 6:** Connect garden hose to the cold water source.

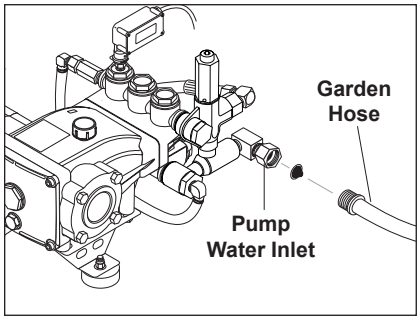


**STEP 7:** Connect the garden hose to pump water inlet. Inspect inlets.

***CAUTION: Do not run the pump without water or pump damage will result.***

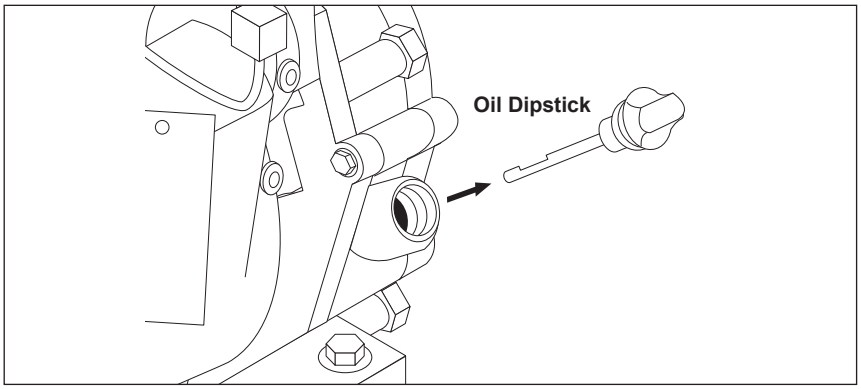


**STEP 1:** Check engine oil level. Oil level should be level with the bottom of the oil filler neck. Be sure the machine is level when checking the oil level. (Refer to the engine's operating manual included with machine.) We recommend that the oil be changed after the first 5 hours of use, then once every 50 hours. Note: Improper oil levels will cause low oil sensor to shut off engine. **IMPORTANT! Do not run engine with high or low oil levels as this will cause engine damage.**

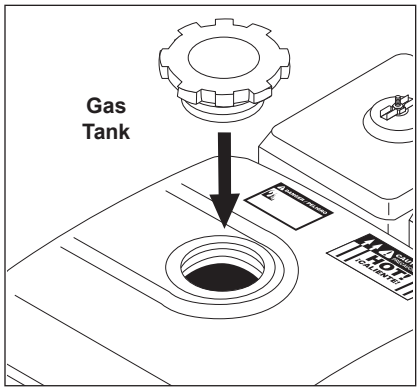


**STEP 2:** Fill gas tank with unleaded gasoline. Do not use leaded gasoline.

***Caution: Read warnings on pg. 4 and engine manual.***

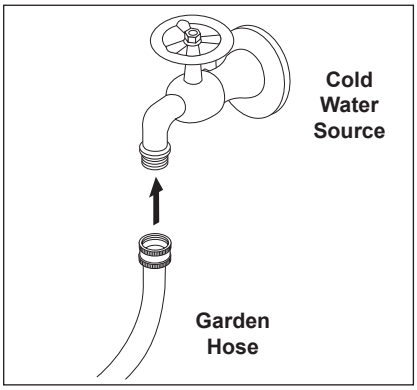


**STEP 3:** Connect garden hose to the cold water source and turn water on completely. Never use hot water.

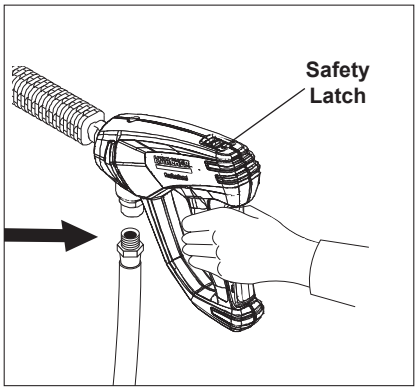


**STEP 4:** Trigger the spray gun to eliminate trapped air then wait for a steady flow of water to emerge from the spray nozzle.

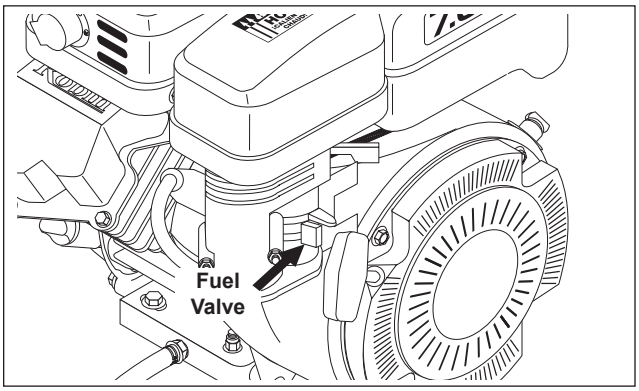


**STEP 5:** Rotate the fuel shut-off valve to the "On" position. Slide the fuel valve lever to the "ON" position. When the engine is not in use, leave the fuel valve in the "OFF" position.

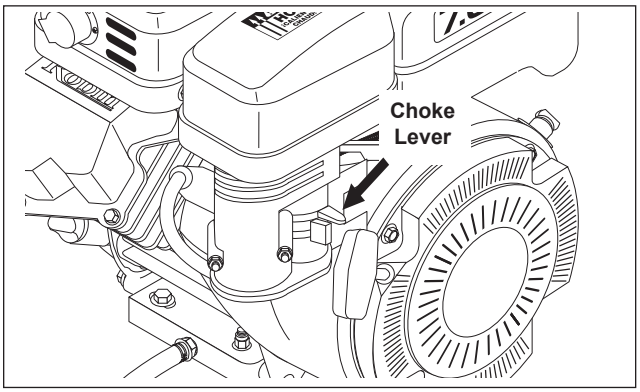


**STEP 6:** Pull the choke lever out to the "Choke" position (on a warm engine, leave the choke lever in, in the run position). Push the choke lever to the "Closed" position. To restart a warm engine, leave the choke lever in the "Open" position.

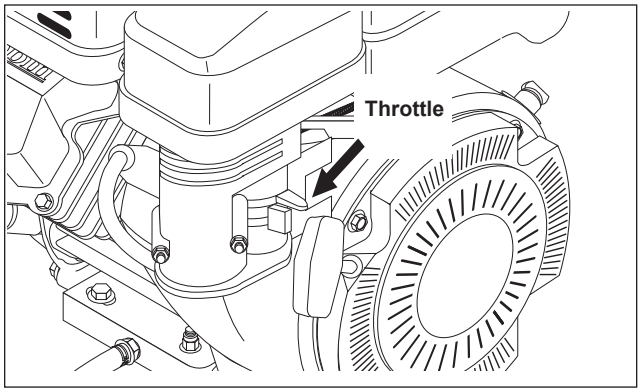


**STEP 7:** Turn the engine to "Run" position.

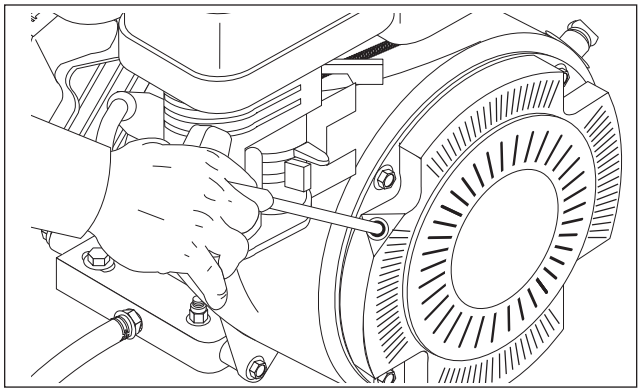

**STEP 8:** Pull the starter grip. If the engine fails to start after 2 pulls, squeeze the trigger gun to release pressure and repeat step. Return starter gently. After the engine warms up enough to run smoothly, move choke to run position and throttle to fast position.

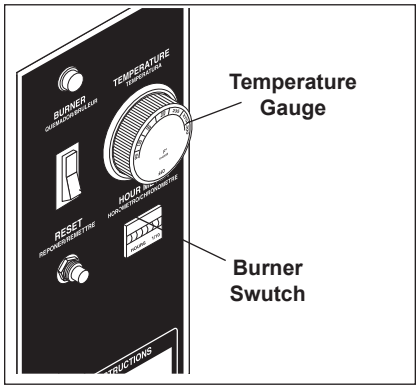


**STEP 9:** If hot water is required. Adjust temperature gauge to proper temperature (200°). Turn on Burner switch to begin heating water.

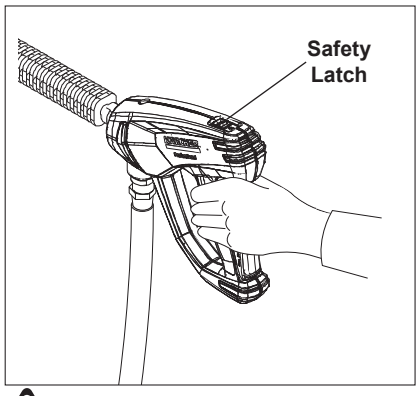


⚠ ***WARNING! Never replace nozzles without engaging the safety latch on the spray gun trigger.***

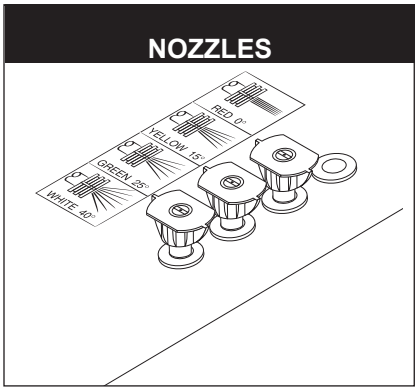


The four color-coded quick connect nozzles provide a wide array of spray widths from 15° to 40° and are easily accessible when placed in the convenient rubber nozzle holder, which is provided on the front of the machine.

**NOTE:** For a more gentle rinse, select the white 40° or green 25° nozzle. To scour the surface, select the yellow 15° nozzle. To apply detergent select the black nozzle.

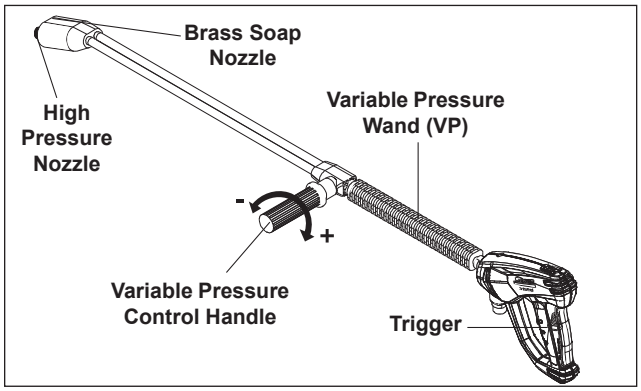


Selection of high or low pressure is accompanied by turning the handle. **NOTE:** High pressure nozzle must be inserted at end of wand to obtain high pressure. To apply soap read operator's manual.

# DETERGENTS AND CLEANING TIPS

***WARNING: Some detergents may be harmful if inhaled or ingested, causing severe nausea, fainting or poisoning. The harmful elements may cause property damage or severe injury.***

**STEP 1:** Connect detergent injector to discharge nipple on machine, Connect high pressure hose to injector with quick coupler(check to make sure locking coupler sleeves are in proper position before applying water pressure.

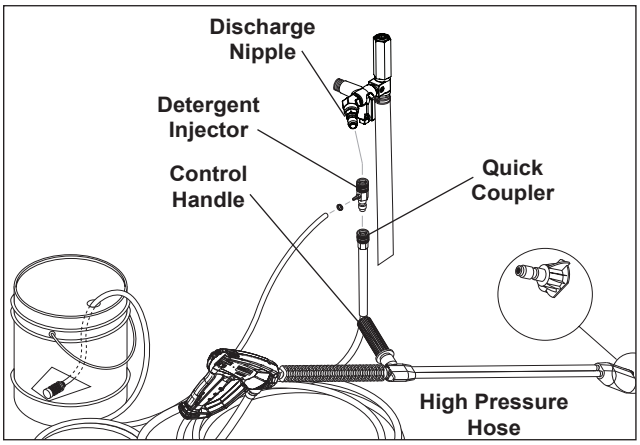


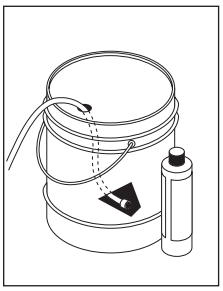

**STEP 2:** Use detergent designed specifically for pressure washers. Household detergents could damage the pump. Prepare detergent solution as required by the manufacturer. Fill a container with pressure washer detergent. Place the filter end of detergent suction tube into the detergent container.

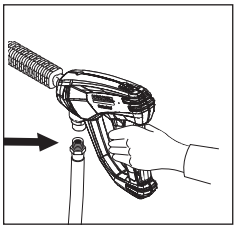

**STEP 3:** Apply safety latch to spray gun trigger. Turn variable pressure control handle until discharge water exits both tubes. Secure black detergent nozzle into quick coupler if you have a single wand. **NOTE:** Detergent cannot be applied using Yellow, Green or White nozzles.

**STEP 4:** With the engine running, pull trigger to operate machine. Liquid detergent is drawn into the machine and mixed with water. Apply detergent to work area. Do not allow detergent to dry on surface.

***IMPORTANT: You must flush the detergent injection system after each use by placing the suction tube into a bucket of clean water, then run the pressure washer in low pressure for 1-2 minutes.***

## THERMAL PUMP PROTECTION

If you run the engine on your pressure washer for 3-5 minutes without pressing the trigger on the spray gun, circulating water in the pump can reach high temperatures. When the water reaches this temperature, the pump protector engages and cools the pump by discharging the warm water onto the ground. This thermal device prevents internal damage to the pump.

## CLEANING TIPS

Pre-rinse cleaning surface with fresh water. Place detergent suction tube directly into cleaning solution and apply to surface at low pressure (for best results, limit your work area to sections approximately 6' square and always apply detergent from bottom to top). Allow detergent to remain on surface 1-3 minutes. Do not allow detergent to dry on surface. If surface appears to be drying, simply wet down surface with fresh water. If needed, use brush to remove stubborn dirt. Rinse at high pressure from top to bottom in an even sweeping motion keeping the spray nozzle approximately 1' from cleaning surface. Use overlapping strokes as you clean and rinse any surface. For best surface cleaning action spray at a slight angle.

### Recommendations:

- Before cleaning any surface, an inconspicuous area should be cleaned to test spray pattern and distance for maximum cleaning results.
- If painted surfaces are peeling or chipping, use extreme caution as pressure washer may remove the loose paint from the surface.
- Keep the spray nozzle a safe distance from the surface you plan to clean. High pressure wash a small area, then check the surface for damage. If no damage is found, continue to pressure washing.

***CAUTION - Never use:***

- Bleach, chlorine and other corrosive chemicals
- Liquids containing solvents (i.e., paint thinners, gasoline, oils)
- Tri-sodium phosphate products
- Ammonia products
- Acid-based products

These chemicals will harm the machine and will damage the surface being cleaned.

## RINSING

It will take a few seconds for the detergent to clear. Apply safety latch to spray gun. Remove black soap nozzle from the quick coupler. Select and install the desired high pressure nozzle. **NOTE:** You can also stop detergent from flowing by simply removing detergent siphon tube from bottle.

# SHUTTING DOWN AND CLEAN-UP

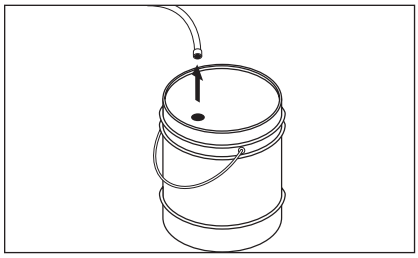

**STEP 1:** Remove detergent suction tube from container and insert into 1 gallon of fresh water. Turn variable pressure wand handle for low pressure or connect the black detergent nozzle. Pull trigger on spray gun and siphon water for one minute.

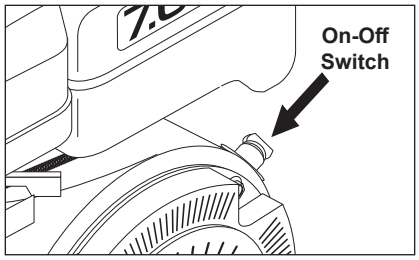


**STEP 2:** Turn off the engine.

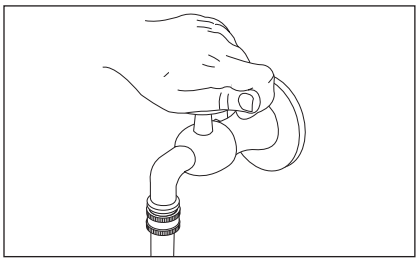

**STEP 3:** Turn off water supply.

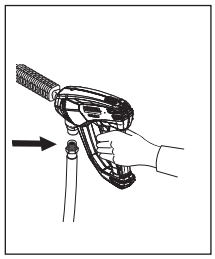

**STEP 4:** Press trigger to release water pressure.

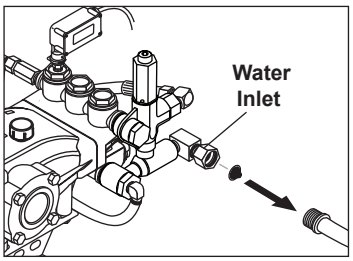


**STEP 5:** Disconnect the garden hose from the water inlet on the machine.

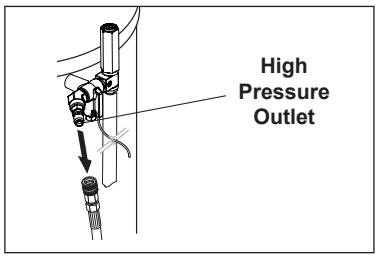


**STEP 6:** Disconnect the high pressure hose from high pressure outlet.

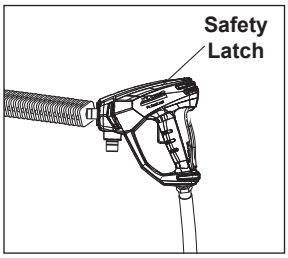


**STEP 7:** Engage the spray gun safety lock.

# STORAGE

***CAUTION: Always store your pressure washer in a location where the temperature will not fall below 32°F (0°C). The pump in this machine is susceptible to permanent damage if frozen. FREEZE DAMAGE IS NOT COVERED BY WARRANTY.***

1. Stop the pressure washer, squeeze spray gun trigger to release pressure.
2. Detach water supply hose and high pressure hose.
3. Turn on the machine for a few seconds, until remaining water exits. Turn engine off immediately.
4. Drain the gas and oil from the engine.
5. Do not allow high pressure hose to become kinked.
6. Store the machine and accessories in a room which does not reach freezing temperatures.

***CAUTION: Failure to follow the above directions will result in damage to your pressure washer.***

When the pressure washer is not being operated or is being stored for more than one month, follow these instructions:

1. Replenish engine oil to upper level.
2. Drain gasoline from fuel tank, fuel line, fuel valve and carburetor.
3. Pour about one teaspoon of engine oil through the spark plug hole, pull the starter grip several times and replace the plug. Then pull the starter grip slowly until you feel increased pressure which indicates the piston is on its compression stroke and leave it in that position. This closes both the intake and exhaust valves to prevent rusting of cylinder.
4. Cover the pressure washer and store in a clean, dry place that is well ventilated away from open flame or sparks. **NOTE:** The use of a fuel additive, such as STA-BIL®, or an equivalent, will minimize the formulation of fuel deposits during shortage. Such additives may be added to the gasoline in the fuel tank of the engine, or to the gasolinee in a storage container.

## After Extended Storage

***CAUTION: Prior to restarting, thaw out any possible ice from pressure washer hoses, spray gun or wand.***

## Engine Maintenance

During the winter months, rare atmosheric conditions may develop which will cause an icing condition in the carburetor. If this develops, the engine may run rough, lose power and may stall. This temporary condition can be overcome by deflecting some of the hot air from the engine over the carburetor area. **NOTE:** Refer to the engine manufacturer's manual for service and maintenance of the engine.

## PREVENTATIVE MAINTENANCE

1. Check to see that the water pump is properly lubricated.
2. Follow Winterizing Procedures to prevent freeze damage to the pump and coils.
3. Always neutralize and flush detergent from system after use.
4. If water is known to be high in mineral content, use a water softener in your water system or de-scale as needed.
5. Do not allow acidic, caustic or abrasive fluids to be pumped through system.
6. Always use our high grade quality cleaning products.
7. Never run pump dry for extended periods of time.
8. Use clean fuel: kerosene, No. 1 fuel oil or diesel. Replace fuel filter every 100 hours of operation. Avoid water contaminated fuel as it will seize up the fuel pump.
9. If machine is operated with smoking or eye burning exhaust, coils will soot up, not letting water reach maximum operating temperature. (See section on Air Adjustments.)
10. Never allow water to be sprayed on or near engine or burner assembly or any electrical component.
11. Periodically delime coils as per instructions.
12. Check to see that engine is properly lubricated.

It is advisable, periodically, to visually inspect the burner. Check air inlet to make sure it is not clogged or blocked. Wipe off any oil spills and keep this equipment clean and dry.

The areas around the pressure washer should be kept clean and free of combustible materials, gasoline and other flammable vapors and liquids.

The flow of combustion and ventilating air to the burner must not be blocked or obstructed in any manner. Consult factory if vent stacking is going to be used.

## MAINTENANCE AND SERVICE

### Unloader Valves:

Unloader valves are preset and tested at the factory before shipping. Occasional adjustment of the unloader may be necessary to maintain correct pressure. Call your local dealer for assistance.

### Winterizing Procedure:

Damage due to freezing is not covered by warranty. Adhere to the following cold weather procedures whenever the washer must be stored or operated outdoors under freezing conditions.

During winter months, when temperatures drop below 32°F, protecting your machine against freezing is necessary. Store the machine in a heated room. If this is not possible then mix a 50/50 solution of anti-freeze/water into a 5 gallon bucket. Place a short section of garden hose into the bucket and connect it to the machine. Elevate the bucket and turn the pump on to siphon the anti-freeze through the machine. If compressed air is available, an air fitting can be screwed into the inlet connector and, by injecting compressed air, all water will be blown out of the system.

### High Limit Hot Water Thermostat:

For safety, each machine is equipped with a high limit control switch. In the event that the temperature of the water should exceed its operating temperature, the high limit control will turn the burner off until the water cools.

### Pumps:

Use only SAE 30W non-detergent oil. Change oil after the first 50 hours of use. Thereafter, change the oil every three months or at 500 hour intervals. Oil level should be checked by using the dipstick found on top of the pump or the red dot visible through the oil gauge window. Oil should be maintained at that level.

### Cleaning of Coils:

In alkaline water areas, lime deposits can accumulate rapidly inside the coil pipes. This growth is increased by the extreme heat build up in the coil. The best prevention for liming conditions is to use high quality cleaning detergents. In areas where alkaline water is an extreme problem, periodic use of our Deliming Powder (part #8.718-911.0) will remove lime and other deposits before coil becomes plugged. (See Deliming Instructions for use of Deliming Powder.)

### Deliming Coils:

Periodic flushing of coils is recommended.

1. Fill a container or optional float tank with 4 gallons of water, then add 1 lb. of deliming powder. Mix thoroughly.
2. Remove wand assembly from spray gun and put spray gun into container. Secure the trigger on the spray gun into the open position.
3. Attach a short section (3-5 ft.) of garden hose to machine to siphon solution from an elevated container. Turn pump switch on, allowing solution to be pumped through coils back into the container. Solution should be allowed to circulate 2-4 hours.
4. After circulating solution flush entire system with fresh water. Reinstall wand assembly to spray gun.

### Fuel:

Use clean fuel oil that is not contaminated with water and debris. Replace fuel filter and drain tank every 100 hours of operation.

Use No. 1 or No. 2 Heating Oil (ASTM D306) only. **NEVER** use gasoline in your burner tank. Gasoline is more combustible than fuel oil and a serious explosion could result. **NEVER** use crankcase or waste oil in your burner. Fuel unit malfunction could result from contamination.

### Fuel Control System:

These machines utilize a fuel solenoid valve located on the fuel pump to control the flow of fuel to the combustion chamber. This solenoid valve, which is normally closed, is activated by a flow switch when water is flowing through it. When an operator releases the trigger on the spray gun, the flow of water through the flow switch stops, turning off the current to the fuel solenoid. The solenoid then closes, shutting off the supply of fuel to the combustion chamber. Controlling the flow of fuel in this way allows for an instantaneous burn or no burn situation, thereby eliminating high and low water temperatures, and combustion smoke normally associated with machines incorporating a spray gun.

***CAUTION: Periodic inspection is recommended to insure that the fuel solenoid valve functions properly. This can be done by operating the machine and checking to see that when the trigger on the spray gun is in the off position, the burner is not firing.***

### Electrode Setting:

**(See illustration below.)**

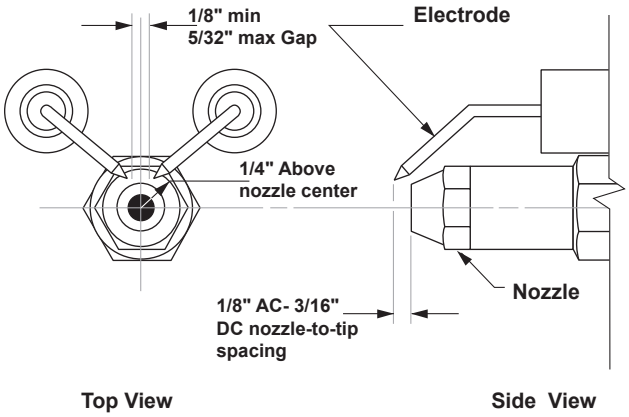


**Periodically check wiring connections. If necessary to adjust electrodes, use diagram.**

### Burner Nozzle:

Keep the tip free of surface deposits by wiping it with a clean, solvent-saturated cloth, being careful not to plug or enlarge the nozzle. For maximum efficiency, replace the nozzle each season.

### Wayne Burner Air Adjustment:

Machines are preset and performance tested at the factory - elevation 100 feet. A one-time initial correction for your location will pay off in economy, performance and extended service life. If a smoking or eye-burning exhaust is being emitted from the stack, two things should be checked. First, check the fuel to be certain that kerosene or No. 1 home heating fuel is being used. Next, check the air adjustment on the burner.

**To adjust:** Start machine and turn burner ON. Loosen the locking screws found in the air band openings (refer to illustration below) and close air band until black smoke appears from burner exhaust vent. Note air band position. Next, slowly open the air band until white smoke just starts to appear. Turn air band halfway back to the black smoke position previously noted. Tighten locking screws.

## WAYNE FUEL AIR ADJUSTMENT

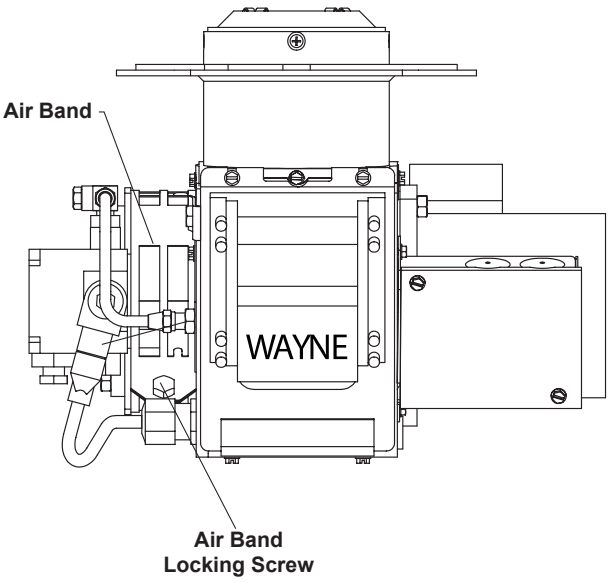

### Wayne Burner Fuel Pressure Adjustment:

To adjust fuel pressure, First install a pressure gage into the port just after the pump fuel exit. Turn the adjusting screw (located at the regulator port) clockwise to increase, and counterclockwise to decrease. Do not exceed 205 psi or lower the pressure below 130 PSI, when checked at the post-pump pressure port.

The fuel pressure may need to be adjusted due to altitude. For every 500 ft altitude above sea level, the boiling point of water goes down 1 °F. At high altitude environments, this boiling point change may require the heat input to be lowered so the water input does not turn to steam earlier than at the factory settings and activate the pressure sensors and pressure relief equipment when the unit is operated and much higher altitudes from factory settings or local dealer site settings. Check with your dealer before making local site fuel pressure adjustments.

Also, as ambient temperature changes seasonally, the fuel temperature in the feed tank and air temperature inlet can impact fuel flow. In more extreme temperatures, this local-site adjustment may also require different fuel nozzles for fuel inlet temperatures that are at seasonal extremes (higher or lower) in locations where the temperature changes are beyond moderate temperatures of between 40°F and 90°F. Colder temperatures will make for a thicker flow and less fine a fuel spray while hotter temperatures will make for a thinner flow a more fine spray with the same nozzle. Consider alternate nozzle configurations from the baseline factory-supplied nozzle for operating in such temperature extremes if performance is not meeting needs with air band and fuel pressure settings alone.

**NOTE:** When changing fuel pump, a by-pass plug must be installed in return line port or fuel pump will not prime.

### Karcher Clear Fire Oil Burner

**Burner Air Adjustment:** The oil burner on this machine is preset for operation at altitudes below 1000 feet. If operated at higher altitudes, it may be necessary to adjust the air band for a #1 or #2 smoke spot on the Bacharach scale.

To adjust, start machine and turn burner ON. Loosen two locking screws found on the air band and close air band until black smoke appears from burner exhaust vent. Note air band position. Next, slowly open the air band until white smoke just starts to appear. Turn air band halfway back to the previously noted position. Tighten locking screws.

### KNA Burner Air Adjustment

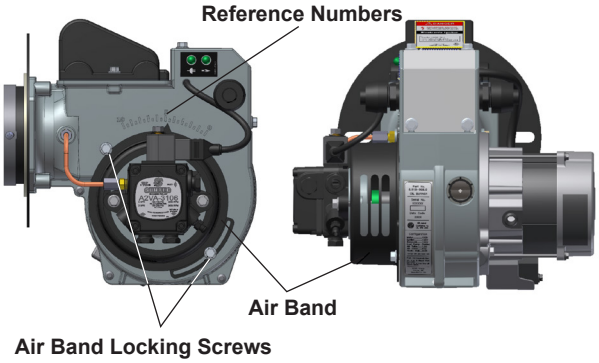


***CAUTION: If white smoke appears from burner exhaust vent during start-up or operation, discontinue use and readjust air bands.***

**NOTE:** If a flue is installed, have a professional serviceman adjust your burner for a #1 or #2 smoke spot on the Bacharach scale.

### Removal of Soot and Heating Coil:

In the heating process, fuel residue in the form of soot deposits may develop on the heating coil and block air flow which will affect burner combustion. When soot has been detected on visual observation, the soot on the coil must be washed off after following the coil removal steps.

1. Remove the tank head assembly by lifting the tank head off.
2. Remove the two pipe nipples and associated fittings.
3. Lift the coil out of the outer wrap.

***CAUTION: The coil weighs about 80 lbs. Use proper lifting techniques.***

4. Clean, repair and replace the coil by reversing the above steps.

### Coil Reinstallation:

Reinstall by reversing the above steps 4 through 1.

**Final Note:**

The 12 VDC burner systems can draw as much as 18 amps! For such burners to run properly, the battery and engine charging system must be kept in good condition. The engine must run at the correct RPM to adequately charge the battery. It is equally important not to throttle down the engine on models without batteries, since all power to run the burner comes solely from the engine. Do not throttle down the engine at anytime while the machine is operating.

# TROUBLESHOOTING

| PROBLEM | POSSIBLE CAUSE | SOLUTION |
|---|---|---|
| **LOW OPERATING PRESSURE** | Water supply is insufficient | Use larger supply hose; clean filter at water inlet. |
| | Spray nozzle is old, worn or incorrect | Match the nozzle number to the machine and/or replace with new nozzle. |
| | Belt slips | Tighten or replace belt; use correct belt. |
| | Plumbing or hose is leaking | Check plumbing system for leaks. Retape leaks with teflon tape. |
| | Unloader is faulty or misadjusted | Adjust unloader for proper pressure. Install repair kit when necessary or replace. |
| | Packing in pump is worn | Install new packing kit. |
| | Discharge valve in pump or inlet is fouled or dirty | Check inlet and discharge valve. |
| | Discharge valve or inlet is worn | Replace with valve kit. |
| | Spray nozzle has obstruction | Remove obstruction. |
| | Steam pressure control valve is leaking (where applicable) | Rebuild or replace as necessary. |
| | Engine RPM is slow | "Set engine speed at proper specifications / see serial plate." |
| **BURNER WILL NOT LIGHT** | There is little or no fuel | Fill tank with fuel. |
| | Improper fuel or water in fuel | Drain fuel tank and fill with proper fuel. |
| | Fuel line is clogged | Clean or replace fuel line. |
| | Fuel filter is plugged | Replace fuel filter as needed. |
| | Burner air bands are misadjusted | Readjust air bands for clean burn. |
| | Little or no fuel pressure from fuel pump | Increase fuel pressure to specification and/or replace fuel pump. |
| | Burner transformer is faulty | Test transformer for proper arc between contacts. Replace as needed. |
| | Electrical wiring is disconnected or has short in it | All wire contacts should be clean and tight with no breaks in wire. |
| | Flex coupling is slipping on fuel pump shaft or burner motor shaft | Replace if needed. |
| | ON-OFF switch is defective | "Check for electrical current reaching burner assembly with burner switch on. Replace switch if needed." |
| | Heavy sooting on coil and burner can cause interruption of air flow and shorting of electrodes | Clean as required. |
| | Electrode setting is improper | Check and reset according to diagram in manual. |
| | 25 amp circuit breaker tripped | Push in reset button. |
| | Bridge rectifier defective | Test and replace. |
| | 12V DC relay defective | Test and replace. |
| | Fuel is not reaching combustion chamber | Check fuel pump for proper flow. Check solenoid flow switch on machines with spray gun control for proper on-off flow control. |

# TROUBLESHOOTING

| PROBLEM | POSSIBLE CAUSE | SOLUTION |
|---|---|---|
| **BURNER WILL NOT LIGHT** (continued from previous page) | Burner nozzle is clogged | Clean as required. |
| | Thermostat has malfunctioned | Test and replace if needed. |
| | Fuel solenoid has malfunctioned | Test and replace if needed. |
| **MACHINE SMOKES** | Fuel is improper or water is in fuel | Drain tank and replace contaminated fuel. |
| | Air adjustment is improper | Readjust air bands on burner assembly. |
| | Fuel pressure is low | Adjust fuel pump pressure to specifications. |
| | Burner nozzle is plugged or dirty | Replace nozzle. Check parts breakdown for nozzle size. |
| | Burner nozzle spray pattern is faulty | Replace nozzle. Check parts breakdown for nozzle size. |
| | Coil and burner assembly have heavy accumulation of soot | Remove coils and burner assembly, clean thoroughly. Call local dealer. |
| | Electrode setting is misaligned | Realign electrodes to specifications. |
| | Smoke stack has obstruction | Check for blockage or other foreign objects. |
| | Engine RPM is low | Increase RPM to correct specs. See serial plate. |
| **LOW WATER TEMPERATURE** | Fuel is improper or has water in it | Replace with clean and proper fuel. |
| | Fuel pressure is low | Increase fuel pressure. |
| | Fuel pump is weak | Check fuel pump pressure. Replace pump if needed. |
| | Fuel filter is partially clogged | Replace as needed. |
| | Soot buildup on coils is not allowing heat transfer | Clean coils. |
| | Burner nozzle is improper | Call your local dealer for proper nozzle. |
| **WATER TEMPERATURE TOO HOT** | Incoming water to machine is warm or hot | Lower incoming water temperature. |
| | Fuel pump pressure is too high | Call your local dealer for proper fuel pressure. |
| | Fuel pump is defective | Replace fuel pump. |
| | Fuel nozzle is incorrect size | See parts breakdown or serial plate for proper size. |
| | Water supplied is insufficient | Check water GPM to machine. |
| | Water flow is restricted | Check nozzle for obstruction and proper size. Check serial plate for correct size. |
| **PRESENCE OF WATER IN OIL** | Oil seal is worn | Check and replace if necessary. |
| | Air humidity is high | Check and change oil twice as often. |
| | Packing is worn or bad | Check and replace if necessary. |

# TROUBLESHOOTING

| PROBLEM | POSSIBLE CAUSE | SOLUTION |
|---|---|---|
| **DETERGENT NOT DRAWING** | Air is leaking | Tighten all clamps. Check detergent lines for holes. |
| | Injector head may be blocked, dirty or damaged | Clean and make sure ball and spring behind detergent hose barb or injector body are working properly. |
| | Filter screen on detergent suction hose is plugged | Clean or replace. |
| | Detergent has high viscosity | Dilute detergent to specifications. |
| | Not using soap nozzle | Insert soap nozzle into wand coupler. |
| | Detergent level is low | Add detergent if needed. |
| **PUMP RUNNING NORMALLY BUT PRESSURE LOW ON INSTALLATION** | Pump is sucking air | Check water supply and possibility of air seepage. |
| | Valves are sticking | Check and clean or replace if necessary. |
| | Unloader valve seat is faulty | Check and replace if necessary. |
| | Nozzle sized incorrectly | Check and replace if necessary (see serial plate for proper size). |
| | Packing piston is worn | Check and replace if necessary. |
| **FLUCTUATING PRESSURE** | Valves are worn | Check and replace if necessary. |
| | Valve has a blockage | Check and replace if necessary. |
| | Pump is sucking air | Check water supply and air seepage at joint in suction line. |
| | Packing piston is worn | Check and replace if necessary. |
| **PUMP NOISY** | Air is in suction line | Check water supply and connections on suction line. |
| | Inlet or discharge valve springs are weak or broken | Check and replace if necessary. |
| | Excessive matter is in valves | Check and replace if necessary. |
| | Bearings are worn | Check and replace if necessary. |
| **WATER DRIPPING FROM UNDER PUMP** | Piston packing is worn | Check and replace if necessary. |
| | O-Ring plunger retainer is worn | Check and replace if necessary. |
| | Piston is cracked | Check and replace if necessary. |
| | Pump protector is worn | Lower water supply pressure. Do not run the spray gun closed longer than 5 minutes. |
| **OIL DRIPPING** | Oil seal is worn | Check and replace if necessary. |
| **EXCESSIVE VIBRATION IN DELIVERY LINE** | Valves are functioning irregularly | Check and replace if necessary. |
| **BURNER MOTOR WILL NOT RUN** | Fuel pump has seized | Replace fuel pump. |
| | Burner fan loose or misaligned | Position correctly and tighten set screw. |
| | Control switch is defective | Replace switch. |
| | There is a loose wire | Check and replace or tighten wiring. |
| | Burner motor is defective | Replace motor. |
| **RELIEF VALVE LEAKS WATER** | Relief valve is defective | Replace or repair relief valve. |

# MAINTENANCE CHARTS

### Preventative Maintenance

This pressure washer was produced with the best available materials and quality craftsmanship. However, you as the owner have certain responsibilities for the correct care of the equipment. Attention to regular preventative maintenance procedures will assist in preserving the performance of your equipment. Contact your dealer for maintenance. Regular preventative maintenance will add many hours to the life of your pressure washer. Perform maintenance more often under severe conditions.

| MAINTENANCE SCHEDULE | | |
|---|---|---|
| **Engine Oil** SAE 10W-30 | Inspect | Daily |
| | Change | Every 25 hours |
| | Filter | Every 50 hours |
| Air Cleaner | Inspect | Every 50 hours or monthly |
| | Clean | Every 3 months |
| Battery Level | | Check monthly |
| Engine Fuel Filter | | 500 hours or 6 months |
| Spark Plug Maintenance | | 500 hours or 6 months |
| Clean Fuel Tank(s) | | Annually |
| Replace Fuel Lines | | Annually |
| **Pump Oil** (Non foaming) SAE 10W-40 | Inspect | Oil level daily |
| | Change | After first 50 hours, then every 500 hours or annually |
| Clean Burner Filter | | Monthly (More often if fuel quality is poor) |
| Remove Burner Soot | | Annually |
| Burner Adjustment/Cleaning | | Annually |
| Replace Burner Nozzle | | Annually |
| Descale Coil | | Annually (more often if required) |
| Replace High Pressure Hose | | Every 6 months |
| Replace Quick Couplers | | Annually |
| Clean Water Screen/Filter | | Weekly |
| Replace HP Hose | | Annually (if there are any signs of wear) |

***NOTE: Read engine manual for any maintenance or service questions.***

# OIL CHANGE RECORD

| Date Oil Changed Month/Day/Year | Estimated Operating Hours Since Last Oil Change | Date Oil Changed Month/Day/Year | Estimated Operating Hours Since Last Oil Change |
|---|---|---|---|
| | | | |
| | | | |
| | | | |
| | | | |
| | | | |
| | | | |
| | | | |
| | | | |

# WIRING DIAGRAM - HDS 3.5/30 PE AND HDS 3.5/35 PE

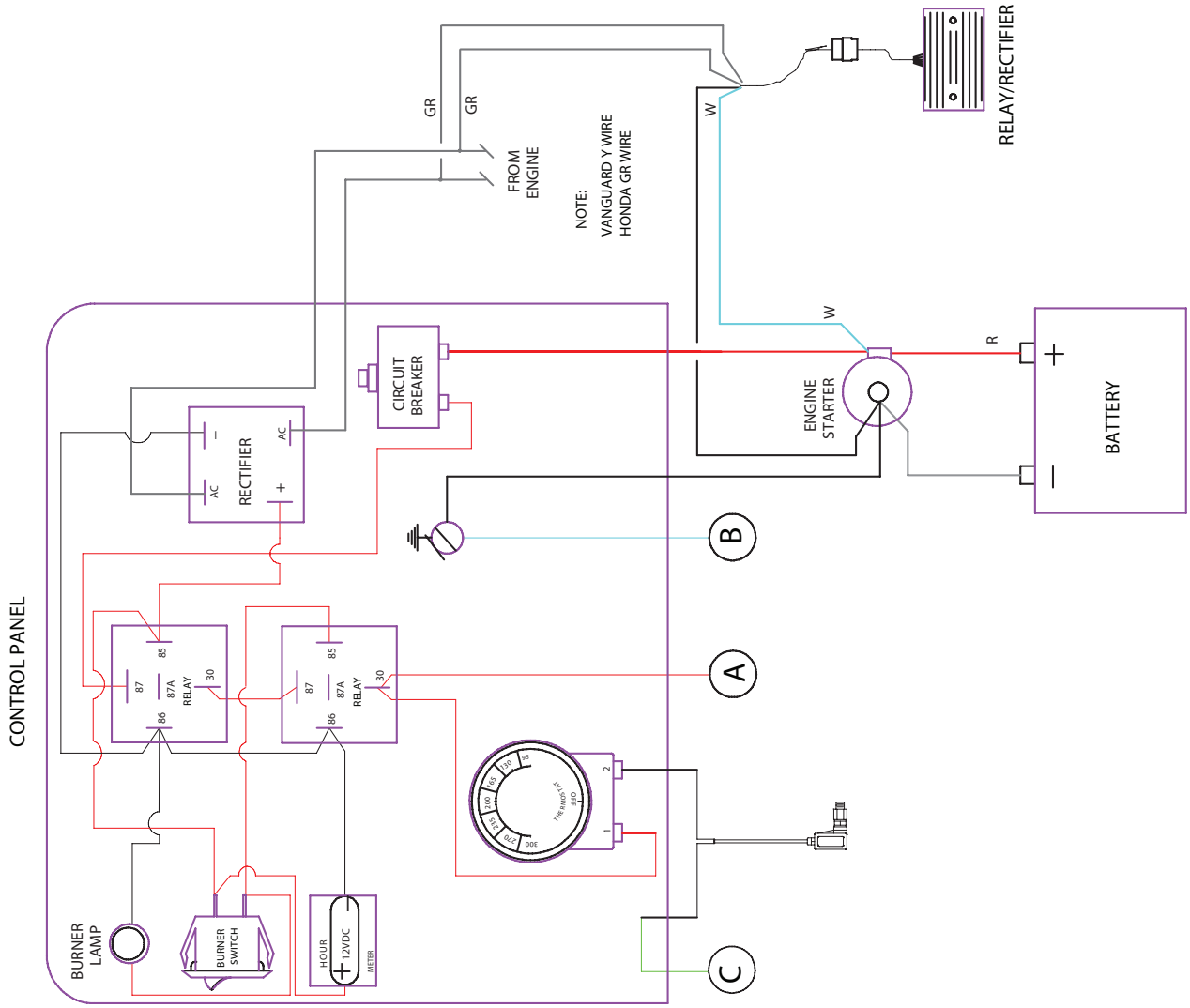

# WIRING DIAGRAM - HDS 3.5/30 PE AND HDS 3.5/35 PE

1. APPLIED 12V ENERGIZES
-BURNER MOTOR WICH STARTS FUEL FLOW
-SHUT OFF VALVE WICH ALLOWS FUEL TO FLOW OUT OF PUMP
-3 SEC, TIMER ENERGIZES THE IGNITOR TO IGNITE FUEL

2. AFTER 3 SEC, TIMER DE-ENERGIZES THE IGNITOR (RESISTOR JUMPER)
ON PHOTOCELL ELEIMATES RE-ENERGIZING IGNITOR IF FLAME IS LOST

3. AFTER 12V HAVE BEEN REMOVED
-BURNER MOTOR IS DE-ENERGIZED WICH STOPS FUEL FLOW
-SHUT OFF VALVE IS DE-ENERGIZED WICH STOPS FUEL FLOW OUT OF PUMP
-3 SEC TIMER IS DE-ENERGIZED

4. SEQUENCE STARS AGAIN WHEN 12V APPLIED

ALL WIRES BLACK UNLESS NOTED
W-WHITE
G-GREEN
R-RED
Y-YELLOW
BL-BLUE
GR-GREY

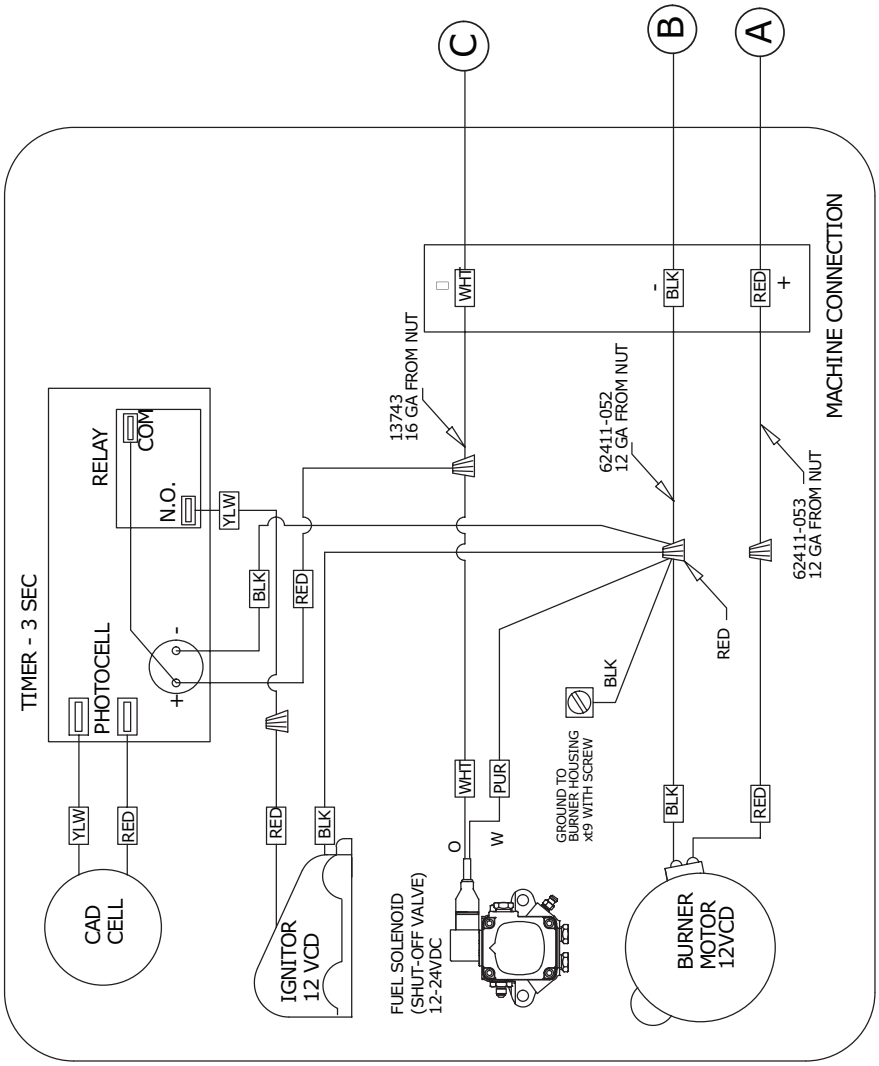

# WIRING DIAGRAM - HDS 2.6/30 P, HDS 3.5/30 P, HDS 2.8/25 P

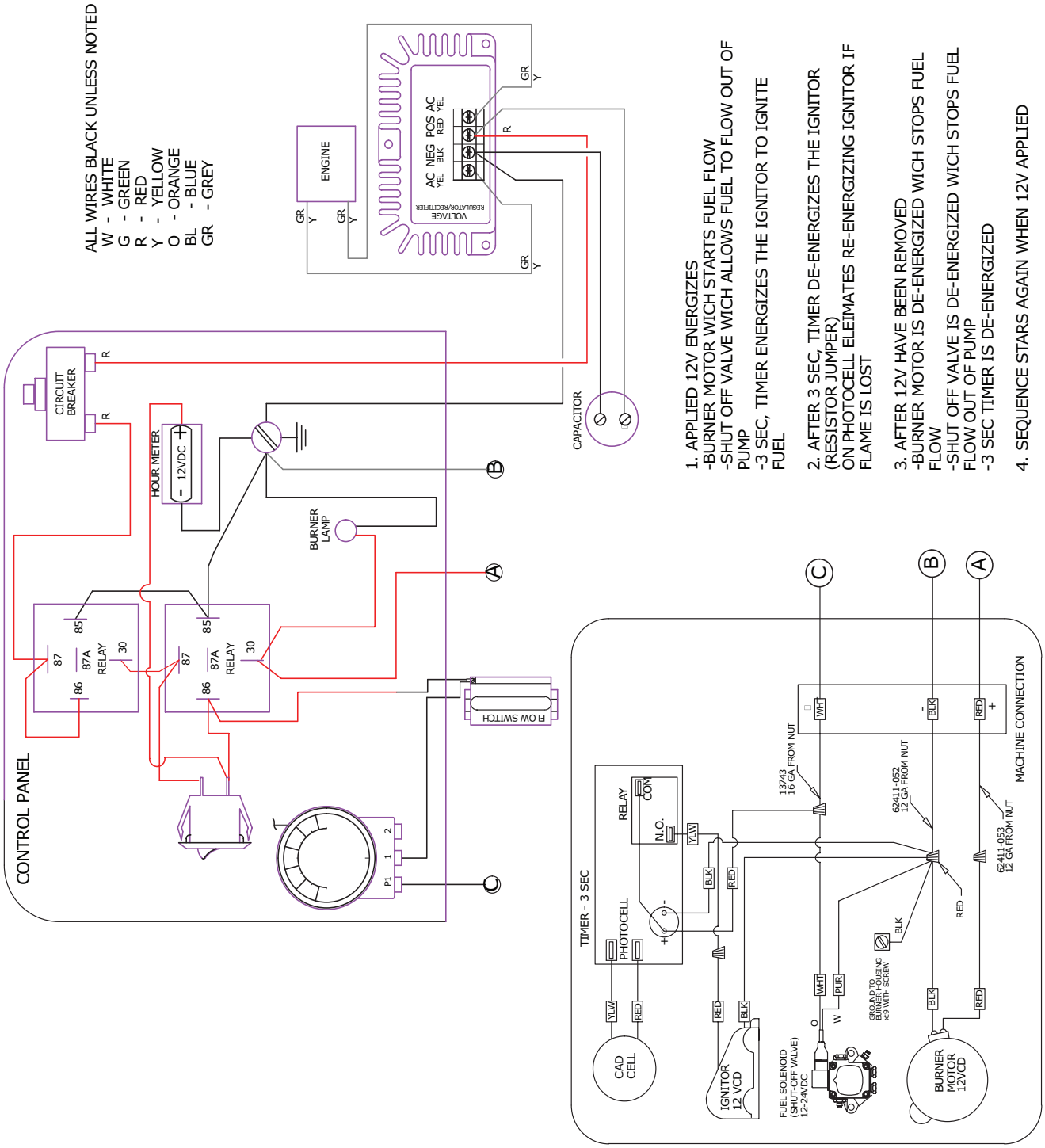

# WIRING DIAGRAM - HDS 3.5/35 P CAGE CAL

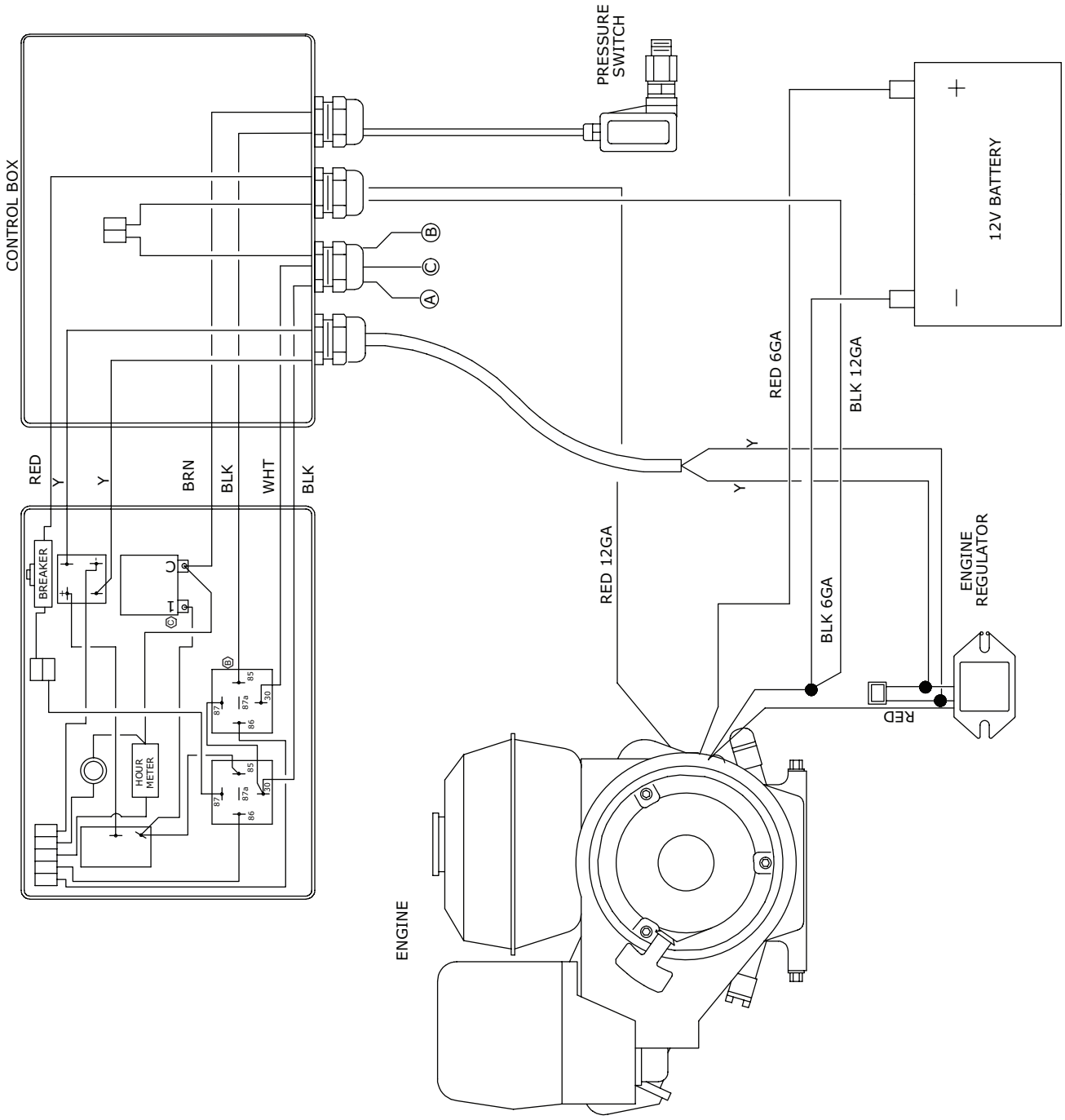

# WIRING DIAGRAM - HDS 3.5/35 P CAGE CAL

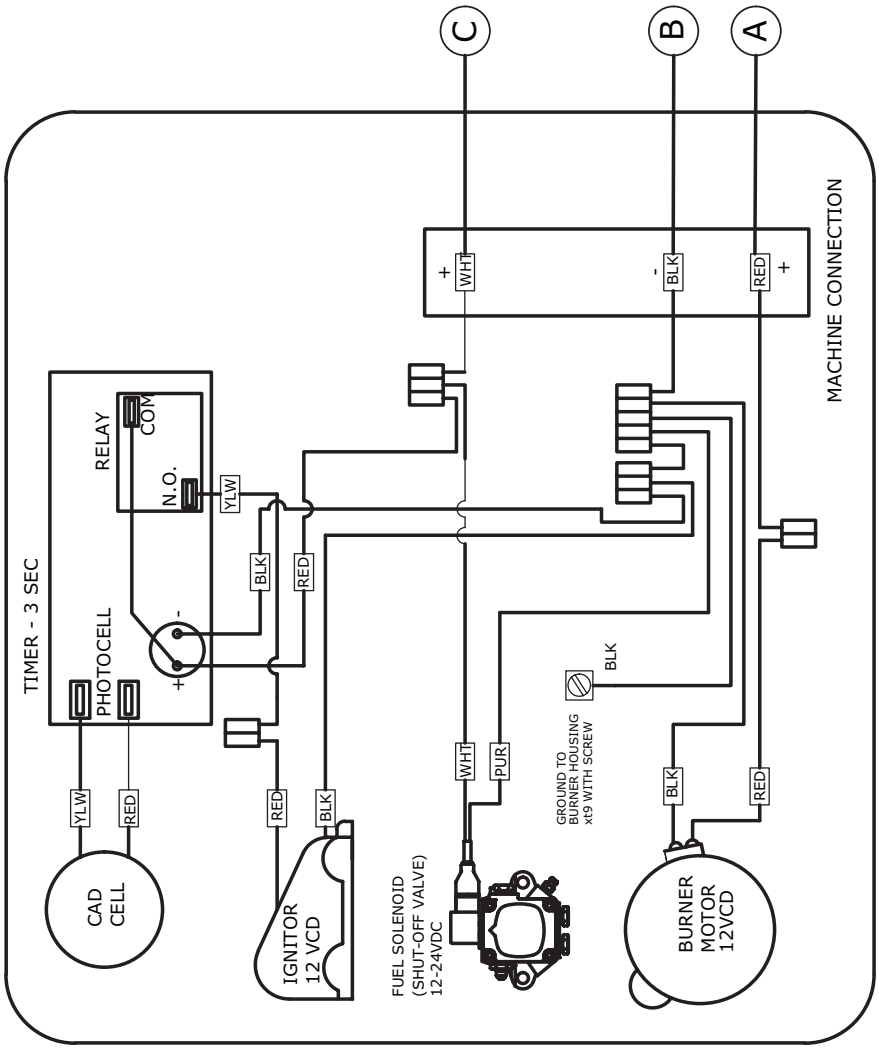


1. APPLY 12V:
   -BURNER MOTOR, STARTS FUEL FLOW
   -FUEL SOLENOID, FUEL NOZZLE START TO ATOMIZE DIESEL
   -TIMER DELAY, ACTIVATES THE IGNITOR
2. AFTER 3 SEC, TIMER RELAY SHUTS OFF THE IGNITOR (CAD CELL WILL START THE IGNITOR AGAIN IF FLAME IS LOST)
3. REMOVE 12V
   -BURNER MOTOR, STOPS FUEL FLOW
   -FUEL SOLENOID, BYPASS THE FUEL
   -TIMER DELAY, SHUTS OFF THE IGNITOR
4. SEQUENCE STARTS AGAIN WHEN 12V APPLIED

# THANK YOU!
## MERCI! DANKE! ¡GRACIAS!

Registrieren Sie Ihr Produkt und profitieren Sie von vielen Vorteilen.

Register your product and benefit from many advantages.

Enregistrez votre produit et bénéficier de nombreux avantages.

Registre su producto y aproveche de muchas ventajas.

**www.kaercher.com/welcome** ★★★★★

Bewerten Sie Ihr Produkt und sagen Sie uns Ihre Meinung.

Rate your product and tell us your opinion.

Évaluer votre produit et dites-nous votre opinion.

Reseñe su producto y díganos su opinión.

**www.kaercher.com/dealersearch**

**Alfred Kärcher SE & Co. KG**
Alfred-Kärcher-Str. 28-40
71364 Winnenden (Germany)
Tel.: +49 7195 14-0
Fax: +49 7195 14-2212