K 3.540

KÄRCHER

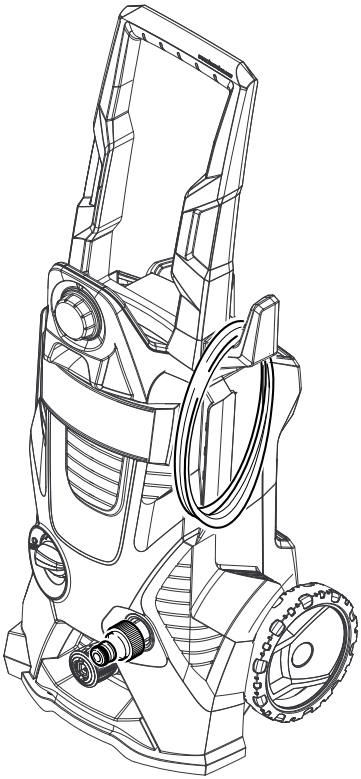

Operating Instructions

Before first use of the unit Please read these Operating Instructions and act in accordance with them

Register and win!
www.kaercher.com

59635920 03/10

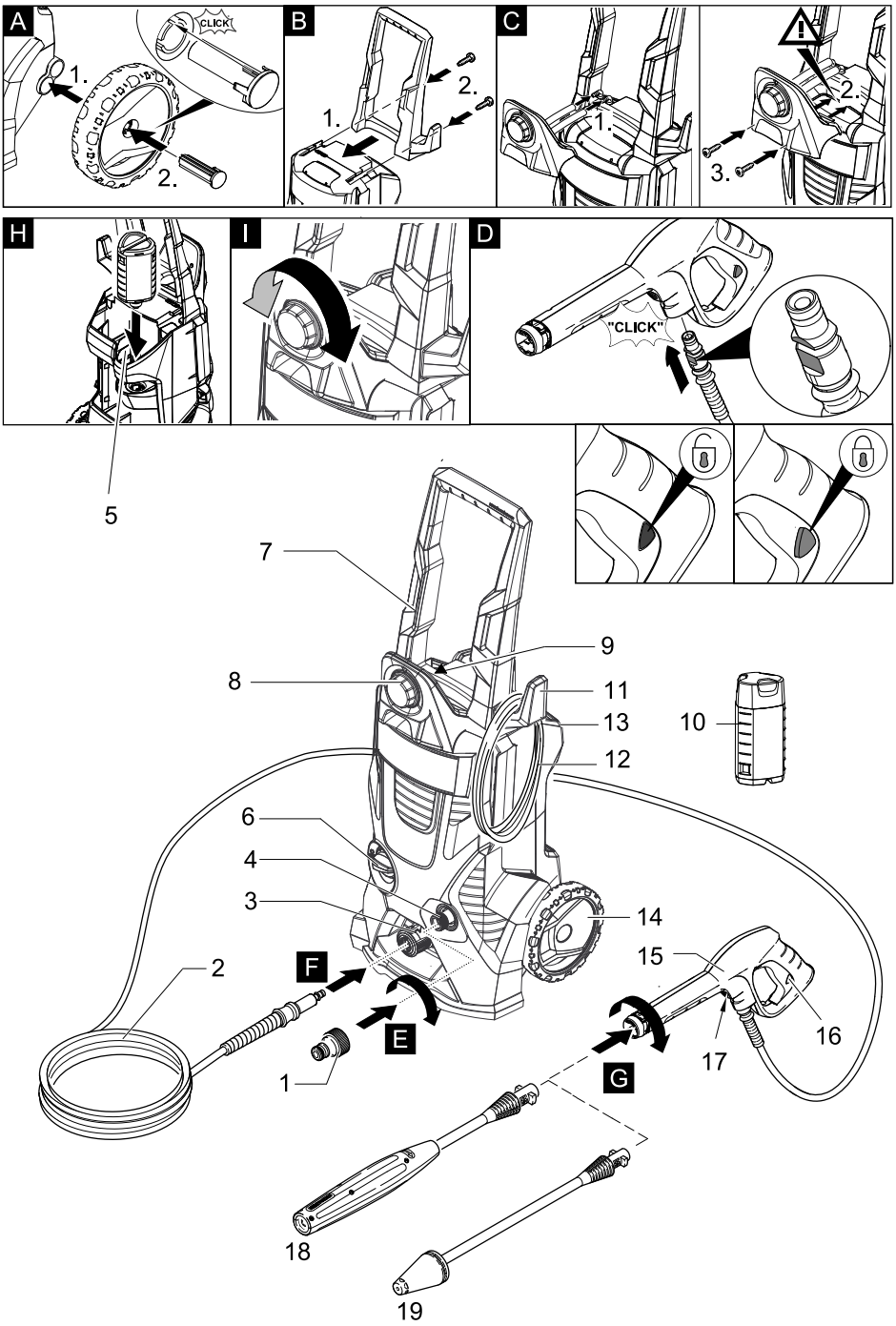
A
CLICK
1.
2.
B
1.
2.
C
1.
2.
3.
H
I
D
"CLICK"
5
7
9
8
11
13
10
12
6
4
3
14
15
2
F
E
1
G
16
17
18
19

Contents

General information	3
Safety instructions	3
Operation	5
Description of the Appliance	5
Transport	8
Storage	8
Maintenance and care	8
Troubleshooting	9
Helpline	9
Technical specifications	10
CE Declaration	10

Dear Customer,

Please read and comply with these original instructions prior to the initial operation of your appliance and store them for later use or subsequent owners.

General information

Proper Use

This high-pressure cleaner is designed for domestic use only:

– to clean machines, vehicles, buildings, tools, facades, terraces, garden equipment etc. using a high-pressure water jet (and detergents if required).
– with accessories, replacement parts and detergents approved by KÄRCHER. Observe the instructions provided with these detergents.

Environmental protection

The packaging material can be recycled. Please do not place the packaging into the ordinary refuse for disposal, but arrange for the proper recycling.

Old appliances contain valuable materials that can be recycled. Please arrange for the proper recycling of old appliances. Please dispose your old appliances using appropriate collection systems.

Notes about the ingredients (REACH)

You will find current information about the ingredients at:

http://www.karcher.de/de/unternehmen/umweltschutz/REACH.htm

Warranty

The warranty terms published by the relevant sales company are applicable in each country. We will repair potential failures of your appliance within the warranty period free of charge, provided that such failure is caused by faulty material or defects in manufacturing. In the event of a warranty claim please contact your dealer or the nearest authorized Customer Service centre. Please submit the proof of purchase.
(See address on the reverse)

Symbols in the operating instructions

⚠ Danger

Immediate danger that can cause severe injury or even death.

⚠ Warning

Possible hazardous situation that could lead to severe injury or even death.

Caution

Possible hazardous situation that could lead to mild injury to persons or damage to property.

Symbols on the machine

– *High-pressure jets can be dangerous if improperly used. The jet must not be directed at persons, animals, live electrical equipment or at the appliance itself.*



– *Frost can destroy the not completely drained appliance. Store the appliance in a frost resistant room during winter.*

Safety instructions

⚠ Danger

- *Never touch the mains plug and the socket with wet hands.*
- *The appliance must not be used if the power cord or important parts of the appliance, e.g. high-pressure hoses, trigger gun or safety devices are damaged.*
- *Check the power cord and mains plug for damage before every use. If the power*

cord is damaged, please arrange for it to be replaced immediately by an authorised repair agent or a skilled electrician

- *Check the high-pressure hose for damage before every use. Please arrange for the immediate replacement of a damaged high-pressure hose.*
- *The appliance may not be used in areas where a risk of explosion is present.*
- *If the appliance is used in hazardous areas (e.g. filling stations) the corresponding safety provisions must be observed.*
- *High-pressure jets can be dangerous if improperly used. The jet must not be directed at persons, animals, live electrical equipment or at the appliance itself.*
- *The high-pressure jet must not be directed at other persons or directed by the user at him/herself to clean clothing or footwear.*
- *Never use the appliance to clean objects containing hazardous substances (e.g. asbestos).*
- *Vehicle tyres or tyre valves are susceptible to damage from the high-pressure jet and may burst. The first indication of this is a discolouration of the tyre. Damaged vehicle tyres/tyre valves are highly dangerous. Ensure that a distance of at least 30 cm is observed when cleaning with the jet!*
- *Risk of explosion!*

  Do not spray flammable liquids.

  Never draw in fluids containing solvents or undiluted acids and solvents! This includes petrol, paint thinner and heating oil. The spray mist thus generated is highly inflammable, explosive and poisonous. Do not use acetone, undiluted acids and solvents as they are damaging to the materials from which the appliance is made.

⚠ *Warning*

- *The mains plug and the coupling of an extension cable must be watertight and must never lay in the water.*
- *Unsuitable extension cables can be hazardous. Only use extension cables outdoors which have been approved for this purpose and labelled with a sufficient cable cross-section: 1 - 10 m: 1.5 mm²; 10 - 30 m: 2.5 mm²*
- *Always fully unroll electrical cables from the cable drum.*
- *High-pressure hoses, fixtures and couplings are important for the safety of the appliance. Only use high-pressure hoses, fixtures and couplings recommended by the manufacturer.*
- *This appliance is not intended for use by persons with reduced physical, sensory or mental capabilities.*

  The appliance must not be operated by children or persons who have not been instructed accordingly.

  Children should be supervised to prevent them from playing with the appliance.
- *Keep packaging film away from children - risk of suffocation!*
- *The operator must use the appliance correctly. When working with the appliance, he must consider the local conditions and pay due care and attention to other persons, in particular children, who are nearby.*
- *Do not use the appliance when there are other persons around unless they are also wearing safety equipment.*
- *Wear protective clothing and safety goggles to protect against splash back containing water or dirt.*

Caution

- *In case of extended downtimes, switch the appliance off at the main switch / appliance switch or remove the mains plug.*
- *Do not operate the appliance at temperatures below 0 °C.*
- *Observe a distance of at least 30 cm when using the jet to clean painted surfaces to avoid damaging paintwork.*
- *Never leave the appliance unattended when it is in operation.*
- *Make sure that the power cable or extension cables are not damaged by running over, pinching, dragging or similar. Protect the power cable from heat, oil, and sharp edges.*
- *All current-conducting parts in the working area must be protected against jet water.*

- *The appliance may only be connected to an electrical supply which has been installed in accordance with IEC 60364.*
- *The appliance may only be connected to alternating current. The voltage must correspond with the type plate on the appliance.*
- *For safety reasons, we recommend that you operate the appliance only via a earth-leakage circuit breaker (max. 30 mA).*
- *Cleaning operations which produce oily waste water, e.g. engine washes, underbody washes, may only be carried out using washing stations equipped with an oil separator.*
- *This appliance was designed to be used with detergents which are supplied or recommended by the manufacturer. The use of other detergents or chemicals may compromise the safety of the appliance.*

Safety Devices

Caution

Safety devices protect the user and must not be modified or bypassed.

Power switch

The appliance switch prevents unintentional operation of the appliance.

Lock trigger gun

This lock locks the lever of the trigger gun and prevents the inadvertent start of the appliance.

Overflow valve with pressure switch

The overflow valve prevents the permissible working pressure from being exceeded.
If the lever on the trigger gun is released the pressure switch turns off the pump, the high-pressure jet is stopped. If the lever is pulled the pump is turned on again.

High pressure hose

The high pressure hose is specially constructed with reinforced walls to handle water pressure up to 13 MPa (1900 psi) - it can be easily damaged and should be stored carefully.

- *Do not kink.*
- *Do not drive vehicles over the hose.*
- *Do not expose the hose to sharp edges or corners.*

Misuse will lead to ballooning or premature failure and will invalidate warranty.

Prerequisites for the appliance's stability

Caution

Create stability for the appliance prior to all work on or with the appliance to prevent accidents or damage.

– The stability of the appliance is warranted when it is placed onto an even surface.

Operation

Scope of delivery

The scope of delivery of your appliance is illustrated on the packaging. Check the contents of the appliance for completeness when unpacking.
In the event of missing accessories or any transport damage, please contact your dealer.

Description of the Appliance

- These operating instructions describe the maximum equipment. Depending on the model, there are differences in the scopes of delivery (see packaging).

Illustrations on Page 2

1 Coupling element for water connection
2 High pressure hose
3 Quick coupling for high pressure hose
4 Water connection with integrated sieve
5 Storage of detergent reservoir with detergent connection
6 Appliance switch "0/OFF“/ „I/ON“
7 Transport handle
8 Dosage regulator for detergent
9 Storage for high-pressure hose
10 Detergent reservoir with locking lid
11 Storage hook for mains connection cable
12 Mains cable with mains plug
13 Storage for accessories
14 Wheels
15 Trigger gun
16 Lock trigger gun

17 Key to detach the high-pressure hose from the trigger gun
18 Spray lance with pressure regulation (Vario Power)
19 Spray lance with Dirtblaster

Special accessories

Special accessories expand the possibilities of using your appliance. Please contact your KÄRCHER dealer for further information.

Before Startup

Mount loose parts delivered with appliance prior to start-up.

Install wheels

➔ Illustration A

Push the wheels into the intake and secure with the enclosed plugs, watch for positioning of plug.

Install the transport handle

You will need the 2 included screws as well as a Philips screwdriver PH 2.

➔ Illustration B

Slide the transport handle into the guide and secure it with 2 screws.

Install the dosage regulator for detergent

You will need the 2 included screws as well as a Philips screwdriver PH 2.

➔ Illustration C

Insert both detergent hoses onto the hose fittings.

Install the dosage regulator and connect using 2 screws.

Note: During installation you must make sure that the tongues of the dosage regulator match up with the intended recesses in the casing.

Connect the high pressure hose to the hand spray gun

➔ Illustration D

Push the high pressure hose into the trigger gun until it locks audibly.

Note: Make sure the connection nipple is aligned correctly.

Check the secure connection by pulling on the high-pressure hose.

Water supply

⚠ ***Warning***



According to the applicable regulations, the appliance must never be used on the drinking water supply without a system separator. Use a suitable system separator manufactured by KÄRCHER; or, as an alternative, a system separator as per EN 12729 Type BA. Water flowing through a system separator is considered non-drinkable.

Note: Impurities in the water can damage the high-pressure pump and accessories. For protection, the use of the KÄRCHER water filter (optional accessory, order no. 4.730-059) is recommended.

Water supply from mains

Observe regulations of water supplier.
For connection values, see type plate/technical data.

➔ Use a fibre-reinforced water hose (not included) with a standard coupling. (Minimum diameter 1/2 inch (13 mm), minimum length 7.5 m).

➔ Illustration E

Screw the coupling element (supplied) to the water connection on the appliance.

Push the water supply hose onto the coupling unit, then connect it to the water supply.

Drawing in water from open reservoirs

This high-pressure cleaner is suited to work with the KÄRCHER suction hose with backflow valve (Optional accessory, order no. 4.440-238) to draw in surface water, e.g. from water butts or ponds (see specifications for max. suction height).

➔ Fill the KÄRCHER suction hose with backflow valve with water, screw to water supply and hang into the water butt.

➔ Separate the high pressure hose from the high pressure connection of the appliance.

➔ Switch the appliance on (I/ON) for a max. of 2 minutes and wait until the water exits the high-pressure connection without bubbles.

➔ Turn off the appliance "0/OFF".

Start up

Caution

Dry runs lasting longer than two minutes lead to damages to the high pressure pump. If the appliance does not build up pressure within two minutes, switch it off and proceed as instructed in the Chapter "Troubleshooting".

➔ Illustration F

Insert the high pressure hose tightly into the quick coupling on the appliance, it will lock in audibly.

Note: Make sure the connection nipple is aligned correctly.

Check the secure connection by pulling on the high-pressure hose.

➔ Illustration G

Push the spray lance into the trigger gun and fasten it by turning it through 90°.

➔ Completely open the water tap.

➔ Insert the mains plug into the socket.

➔ Turn on the appliance “I/ON”.

Operation

⚠ Danger

The trigger gun is subjected to a recoil force when the water jet is discharged. Make sure that you have a firm footing and are also holding the trigger gun and spray lance firmly.

Caution

Prior to cleaning, make sure that the high pressure is placed safely on level ground. Wear protective goggles and protective clothing during the cleaning process.

➔ Unlock the lever on the trigger gun.

➔ Pull on the lever of the trigger gun; the device will switch on.

Note: Release the lever of the trigger gun; the device will switch off again. High pressure remains in the system.

Spray lance with pressure regulation

Carrying out the most common cleaning tasks. The work pressure can be stagelessly regulated between "Min" and "Max".

➔ Release the lever on the trigger gun.

➔ Turn the spray lance to the desired position.

Note: Suitable for working with detergent; for this, turn the spray lance to the "Mix" position.

Spray lance with Dirtblaster

For particularly dirty items or areas.

Caution

Car tyres, paint or sensitive surfaces such as wood should not be cleaned with the dirt blaster, as there is a risk of damage.

– Not suitable for use with detergents.

Working with detergent

Please use exclusively KÄRCHER detergents and care products to carry out the respective cleaning task, as these were specifically developped for your appliance. The use of other detergents and care products may lead to premature wear and can invalidate your warranty claims. Please obtain information at your local dealer or request information directly from KÄRCHER.

Notes regarding the detergent: The most commonly use detergents can be purchased ready to use in their detergent reservoirs with locking lids. This will make the pesky refilling and filling processes redundant.

➔ Illustration H

Remove the lid from the detergent reservoir and press the detergent reservoir into the detergent connection with the opening facing down.

➔ Illustration I

Adjust the suction volume of the detergent solution by means of the dosage regulator for detergents.

➔ Use spray lance with pressure regulation (Vario Power).

➔ Turn the spray lance to "Mix" position.

Note: This will mix the detergent with the water stream.

Note: If required, the washing brushes can be used to work with detergent.

Recommended cleaning method

➔ Spray the detergent sparingly on the dry surface and allow it to react, but not to dry.

➔ Spray off loosened dirt with the high-pressure jet.

Interrupting operation

➔ Release the lever on the trigger gun.
➔ Lock the lever on the trigger gun.
➔ During longer breaks (more than 5 minutes), also turn the appliance off using the "0/OFF" switch.

Finish operation

Caution

Only separate the high-pressure hose from the trigger gun or the appliance while there is no pressure in the system.

➔ Remove the detergent reservoir from the intake and close it with the lid. To store, place into the intake rotated by 180°.
➔ Release the lever on the trigger gun.
➔ Turn off the appliance "0/OFF".
➔ Turn off tap.
➔ Detach the appliance from the water supply.
Caution: When disconnecting the supply or high pressure hose, warm water may leak from the connections after operation.
➔ Press the lever on the trigger gun to release any remaining pressure in the system.
➔ Lock the lever on the trigger gun.
➔ Pull out the mains plug.

Transport

Caution

In order to prevent accidents or injuries, keep in mind the weight of the appliance during transport (see Specifications).

When transporting by hand

➔ Lift appliance by the carrying handle and carry it.
➔ Pull the appliance by its transport handle.

When transporting in vehicles

➔ Prior to horizontal transport: Remove the detergent reservoir from the intake and close it with the lid.
➔ Secure the appliance against shifting and tipping over.

Storage

Caution

In order to prevent accidents or injuries, keep in mind the weight of the appliance when selecting a storage location for it (see Specifications).

Storing the Appliance

➔ Park the machine on an even surface.
➔ Press the disconnect on the hand spray gun and remove the high pressure hose from the hand spray gun.
➔ Push the casing of the quick coupling for the high pressure hose toward the rear and disconnect the high pressure hose from the appliance.
➔ Stow away the mains cable, the high-pressure hose and accessory at the appliance.

Prior to extended storage periods, as during the winter, also observe the instructions in the Care section.

Frost protection

Caution

Protect the appliance and its accessories against frost.

The appliance and its accessories can get destroyed through frost if there are any water residues in them. To avoid damage to them:

➔ Completely drain all water from the appliance: Switch the appliance on with detached high-pressure hose and detached water supply (max. 1 minute) and wait, until no more water exits at the high-pressure connection. Turn off the appliance.
➔ Store the appliance and the entire accessories in a frost-safe room.

Maintenance and care

⚠ ***Danger***

Turn off the appliance and remove the mains plug prior to any care and maintenance work.

Care

Prior to longer periods of storage, e.g. in the winter:

➔ Remove filter from suction hose for detergent and clean under running water.
➔ Pull out the sieve in the water connection using flat-nose pliers and clean under running water.

Maintenance

The appliance is maintenance-free.

Spare parts

Use only original KÄRCHER spare parts. You will find a list of spare parts at the end of these operating instructions.

Troubleshooting

You can rectify minor faults yourself with the help of the following overview.
If in doubt, please consult the authorized customer service.

⚠ ***Danger***

Turn off the appliance and remove the mains plug prior to any care and maintenance work. Repair works may only be performed by the authorized customer service.

Appliance is not running

➔ Pull on the lever of the trigger gun; the device will switch on.
➔ Check whether the voltage indicated on the type plate corresponds to the voltage of the mains supply.
➔ Check the mains connection cable for damages.

Pressure does not build up in the appliance

➔ Check setting at the spray lance.
➔ Appliance ventilation: Switch the appliance on with the high-pressure hose detached and operate (max. 2 minutes) until the water exits the high-pressure connection without bubbles. Switch off appliance and reconnect high-pressure hose.
➔ Check the water supply.
➔ Pull out the sieve in the water connection using flat-nose pliers and clean under running water.

Appliance does not start, motor hums

Cause: Voltage reduction due to weak mains supply or when using an extension cable.

➔ When switching on, first pull the lever of the trigger gun and then switch the appliance switch to "I/ON".

Strong pressure fluctuations

➔ Clean high-pressure nozzle: Remove dirt and debris from the nozzle bore, using a needle and rinse through with water from the front.
➔ Check water flow quantity.

Appliance is leaking

➔ Slight leakage from the appliance pump is normal. If the leakage increases contact the authorized customer service.

No detergent infeed

➔ Use spray lance with pressure regulation (Vario Power).
Turn the spray lance to "Mix" position.
➔ Check the settings at the dosage regulator for detergent.
➔ Check whether the detergent reservoir is placed into the detergent connection facing down.
➔ Check the detergent suction hose for kinks.

Helpline

KÄRCHER UK Limited operate a helpline allowing customers to discuss any problems experienced with our products.
The helpline operates during normal business hours and may be busy at peak periods.If you have difficulty getting through we would ask that you try to contact us again later in the day.

The helpline number is 01295 752200, open from 8.30 am to 5.00 pm Monday to Friday.

It helps us if you have the model number and data plate details to hand before making your call so that we can assist you with your query more effectively.

Alternatively you may write to us at the address below:
KÄRCHER UK Ltd
Kärcher House

Beaumont Road
Banbury
Oxon, OX16 1TB

or E-mail us:
info@karcher.co.uk

Technical specifications

Water connection		
Max. feed temperature	°C	40
Min. feed volume	l/min	10
Max. feed pressure	MPa	0.8
Max. Suction height	m	0.5
Electrical connection		
Voltage 1~50 Hz	V	230-240
Connected load	kW	1.8
Mains fuse (slow-blow)	A	13
Protective class		I
Protection class		IP X5
Performance data		
Working pressure	MPa	11
Max. permissible pressure	MPa	12
Water flow rate	l/min	6.3
Dimensions and weights		
Length	mm	300
Width	mm	325
Height	mm	876
Weight, ready to operate with accessories	kg	13.0
Detergent flow rate	l/min	0 - 0.3
Recoil force of trigger gun	N	15
Values determined as per EN 60335-2-79		
Hand-arm vibration value Uncertainty K	m/s^2 m/s^2	< 2.5 0.3
Sound pressure level L_{pA} Uncertainty K_{pA}	dB(A) dB(A)	73 2
Sound power level L_{WA} + Uncertainty K_{WA}	dB(A)	89

Subject to technical modifications!

CE Declaration

We hereby declare that the machine described below complies with the relevant basic safety and health requirements of the EU Directives, both in its basic design and construction as well as in the version put into circulation by us. This declaration shall cease to be valid if the machine is modified without our prior approval.

Product: High-pressure cleaner
Type: 1.180-xxx

Relevant EU Directives
2006/42/EC (+2009/127/EC)
2004/108/EC
2000/14/EC

Applied harmonized standards
EN 55014–1: 2006
EN 55014–2: 1997 + A1: 2001
EN 60335–1
EN 60335–2–79
EN 61000–3–2: 2006
EN 61000–3–3: 2008
EN 62233: 2008

Applied conformity evaluation method
Appendix V

Sound power level dB(A)
Measured: 87
Guaranteed: 89

The undersigned act on behalf and under the power of attorney of the company management.

H. Jenner
CEO

S. Reiser
Head of Approbation

Alfred Kärcher GmbH Co. KG
Alfred-Kärcher-Str. 28 - 40
71364 Winnenden (Germany)
Phone: +49 7195 14-0
Fax: +49 7195 14-2212

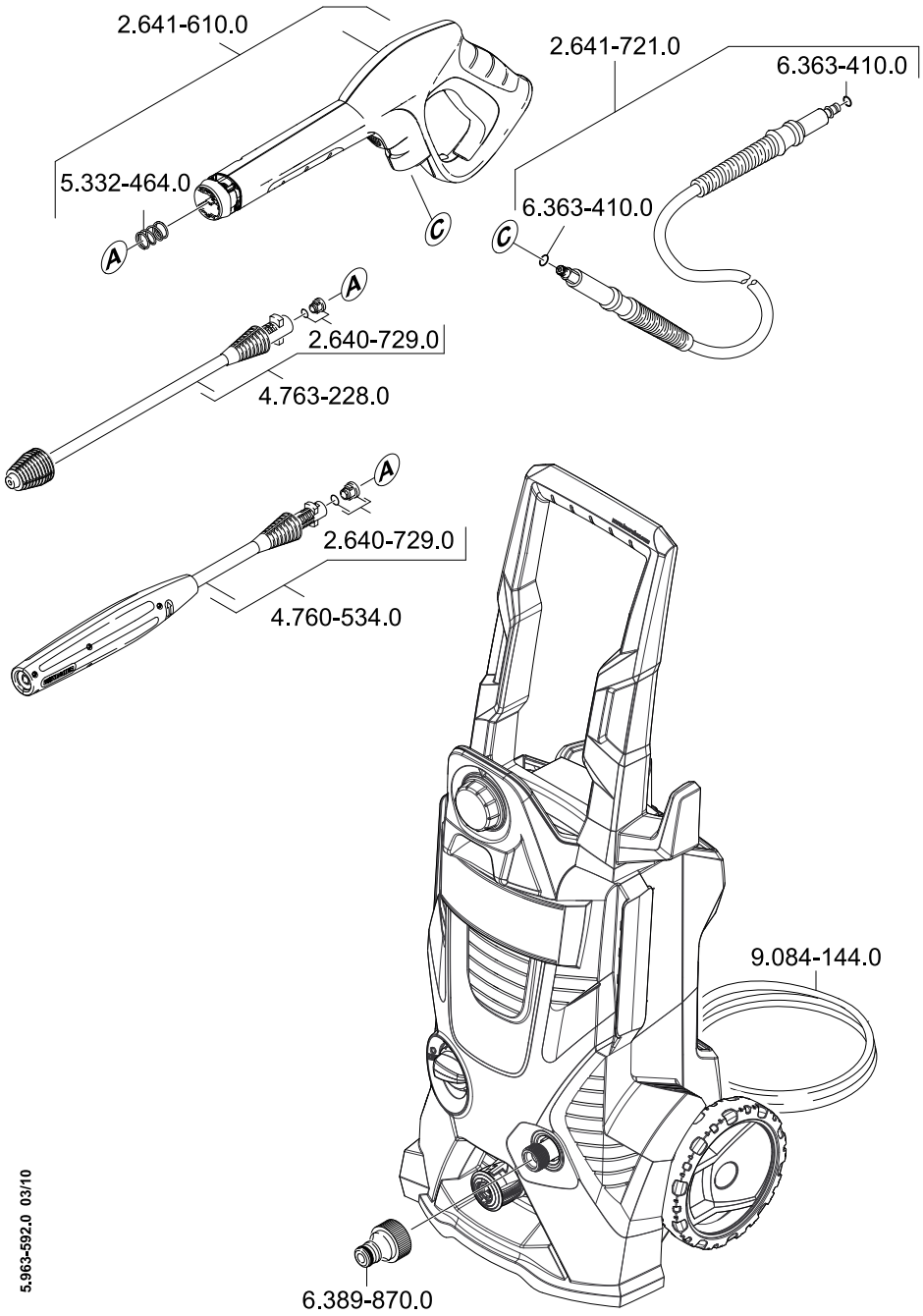

5.963-592.0 03/10

A
Alfred Kärcher Ges.m.b.H.
Lichtblaustraße 7
1220 Wien
☎ (01) 250 600

AUS
Kärcher Pty. Ltd.
40 Koornang Road
Scoresby VIC 3179
☎ (03) 9765 - 2300

B / LUX
Kärcher N.V.
Industrieweg 12
2320 Hoogstraten
☎ B: 0900 10027
LUX: 0032 900 10027

BR
Kärcher Indústria e Comércio Ltda.
Av. Prof. Benedicto Montenegro 419
CEP 13.140-000 - Paulínia - SP
☎ 0800 176 111

CDN
Kärcher Canada Inc.
6975 Creditview Road Unit #2
Mississauga, Ontario L5N 8E9
☎ 1-800-465-4980

CH
Kärcher AG
Industriestraße 16
8108 Dällikon
☎ 0844 850 863

CZ
Kärcher spol s r.o.
Modletice č.p. 141
251 01 Říčany u Prahy
☎ 0323 606 014

D
Alfred Kärcher GmbH & Co. KG
Service-Center Gissigheim
Im Gewerbegebiet 2
97953 Königheim-Gissigheim
☎ (07195) 903 2065

DK
Kärcher Rengøringssystemer A/S
Gejlhavegård 5
6000 Kolding
☎ 70 206 667

E
Kärcher S.A.
Pol. Industrial Font del Radium
Calle Doctor Trueta 6-7
08400 Granollers (Barcelona)
☎ 902 170 068

F
Kärcher S.A.S.
5 Avenue des Coquelicots
Z.A. des Petits Carreaux
94865 Bonneuil-sur-Marne
☎ (01) 43 996 770

FIN
Kärcher OY
Yrittäjäntie 17
01800 Klaukkala
☎ 0207 413 600

GB
Kärcher(UK) Limited
Kärcher House
Beaumont Road
Banbury
Oxon, OX16 1TB
☎ 01295 752 200

GR
Kärcher Cleaning Systems A.E.
31-33, Nikitara str. &
Konstantinoupoleos str.
13671 Acharnes
☎ 210 - 2316 153

H
Kärcher Hungária Kft
Tormásrét ut 2.
2051 Biatorbágy
☎ (023) 530 640

HK
Kärcher Limited
Unit 10, 17/F.
APEC Plaza
49 Hoi Yuen Road
Kwun Tong, Kowloon
☎ (02) 357-5863

I
Kärcher S.p.A.
Via A.Vespucci 19
21013 Gallarate (VA)
☎ 848 - 99 88 77

IRL
Karcher Limited
12 Willow Business Park
Nangor Road
Clondalkin Dublin 12
☎ (01) 409 77 77

KOR
Karcher Co. Ltd. (South Korea)
Youngjae B/D, 50-1, 51-1
Sansoo-dong, Mapo-ku
Seoul 121-060
☎ 032-465-8000

MAL
Karcher Cleaning Systems Sdn. Bhd.
No. 8, Jalan Serindit 2
Bandar Puchong Jaya
47100 Puchong, Selangor
☎ (03) 5882 1148

MEX
Karcher México, SA de CV
Av. Gustavo Baz No. 29-C
Col. Naucalpan Centro
Naucalpan, Edo. de México
C.P. 53000 México
☎ 01 800 024 13 13

N
Kärcher AS
Stanseveien 31
0976 Oslo
☎ 24 17 77 00

NL
Kärcher BV
Postbus 474
4870 AL Etten-Leur
☎ 0900-33 444 33

NZ
Karcher Limited
12 Ron Driver Place
East Tamaki, Auckland
☎ (09) 274-4603

P
Neoparts - Com. e Ind. Automóvel, S.A.
Av. Infante D. Henrique, Lote 35
1800-218 Lisboa
☎ 218558300

PL
Kärcher Sp. z o.o.
Ul. Stawowa 140
31-346 Kraków
☎ (012) 6397-222

PRC
Kärcher Cleaning Systems Co., Ltd.
Part B, Building 30,
No. 390 Ai Du Road
Shanghai Waigaoquiao 200131
☎ (021) 5046-3579

RO
Karcher Romania s.r.l.
Sos. Odaii Nr. 439
013606 Bucureşti
☎ 0372 709 001

RUS
ООО «Керхер»
109147, Москва
ул.Таганская, д.34, стр.3
☎ +7 495 228 39 45

S
Kärcher AB
Tagenevägen 31
42502 Hisings-Kärra
☎ (031) 577-300

SGP
Karcher Asia Pacific Pte. Ltd.
5 Toh Guan Road East
#01-00 Freight Links
Express Distripark
Singapore 608831
☎ 6897-1811

SK
Kärcher Slovakia, s.r.o.
Beniakova 2
94901 Nitra
☎ 037 6555 798

TR
Kärcher Servis Ticaret A.S.
9 Eylül Mahallesi
307 Sokak No. 6
Gaziemir / Izmir
☎ (0232) 252-0708

TWN
Karcher Limited
5F/6. No.7
Wu-Chuan 1st Rd
Wu-Ku Industrial Zone
Taipei County
☎ (02) 2299-9626

UA
Kärcher Ukraine
Kilzeva doroga, 9
03191, Kyiv
☎ (044) 594 75 75

UAE
Karcher FZE
Jebel Ali Free Zone
RA 8, XB 1, Jebel Ali, Dubai
☎ (04) 8836-776

USA
Alfred Karcher, Inc
2170 Satellite Blvd
Suite 350
Duluth, GA 30097
☎ 678-935-4545; 877-527-2437

ZA
Kärcher (Pty.) Limited
144 Kuschke Street
Meadowdale
Edenvale 1614
☎ (011) 574-5360

KÄRCHER®

www.kaercher.com

08/2009